GRIESSER

Sliding shutters

SLIDING SHUTTER	89
PANTOGRAPH SHUTTER	119
SLIDING BI-FOLD SHUTTER	131
PLANNING	151

Sliding shutter

LIMIT DIMENSIONS	90
CALCULATION OF FINISHED SASH DIMENSIONS	96
INSTALLATION SITUATIONS AT TOP	98
INSTALLATION SITUATIONS AT BOTTOM	99
RUNNER RAILS	101
GUIDE RAILS	102
POINT GUIDES	103
SECTIONS/DETAILS: INSTALLATION SITUATIONS AT TOP	104
SECTIONS/DETAILS: INSTALLATION SITUATIONS AT BOTTOM	107
END STOP DIAGRAMS	110
SASH PROTRUSION / SASH OVERLAP	111
FRIEZE	111
SUSPENSION BRACKETS FOR RUNNER RAIL INSTALLATION	112
BOTTOM GUIDE BRACKET	114
LOCKERS / STOPPERS	116
SHELL-TYPE HANDLE	117

V1.2.0 | 20150901

LIMIT DIMENSIONS

Fixed slats

Model	Illustration	Frame profile	Slat profile
A		71 x 33	50 x 10, with 2 reinforcement bars
A Slim		40 x 33	
T		71 x 33	50 x 18, with reinforcement bars
R		71 x 33	60 x 6, with 2 reinforcement bars
H Alu		55 x 45	35 x 15 60 x 15
H Alu Slim		42 x 31	
H Wood		55 x 45	60 x 15, Siberian larch, untreated
H Wood Slim		42 x 31	

Definitions of dimensions 152

V1.2.0 | 20150901

Width min. (bff)	Width max. (bff)	Height min. (hff)	Height max. (hff)	Surface max. [m²]
	2000		3500	7
		330		
	1200		3000	3.6
200				
	1800	280	4000	7.2
	1600	330		5.6
			3500	
				7
			3000	6
250	2000	250		
			3500	7
			3000	6

bff: Finished sash width

hff: Finished sash height

Movable slats

Model	Illustration	Frame profile	Slat profile
B		71 x 33	50 x 10

Clothings

Model	Illustration	Frame profile	Fabric Soltis
Soltis		71 x 33	92 86
Soltis Slim		55 x 45	

Width min. (bff)	Width max. (bff)	Height min. (hff)	Height max. (hff)	Surface max. [m²]
250	1500	330	2800	4.2

Width min. (bff)	Width max. (bff)	Height min. (hff)	Height max. (hff)	Surface max. [m²]
400				
	1800	400	3500	6.3
300				

bff: Finished sash width

hff: Finished sash height

Fillings

Model	Illustration	Frame profile	Filling
S		SYS 70x30	2 mm aluminum sheet
S Slim		40x31	
SL		SYS 70x30	2 mm aluminum sheet, perforated Standard perforations: Q 20x20, Q 35x35, RU 20 and RU 30 mm Distance between hole edges: ≥ 20 mm
SL Slim		40x31	
Sentum		55x45	2 mm aluminum expanded metal Mesh according to choice (optional)
Sentum Slim	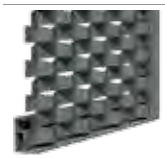	42x31	
Platina		71x33	8 mm Fundermax Uni-Decor plate
Platina Slim		42x31	

Definitions of dimensions 152

V1.2.0 | 20150901

Width min. (bff)	Width max. (bff)	Height min. (hff)	Height max. (hff)	Surface max. [m²]
	2000			7
			3500	
250		250		
				6.3
	1800			
			3000	5.4

bff: Finished sash width

hff: Finished sash height

CALCULATION OF FINISHED SASH DIMENSIONS (IDENTICAL SASH WIDTHS)

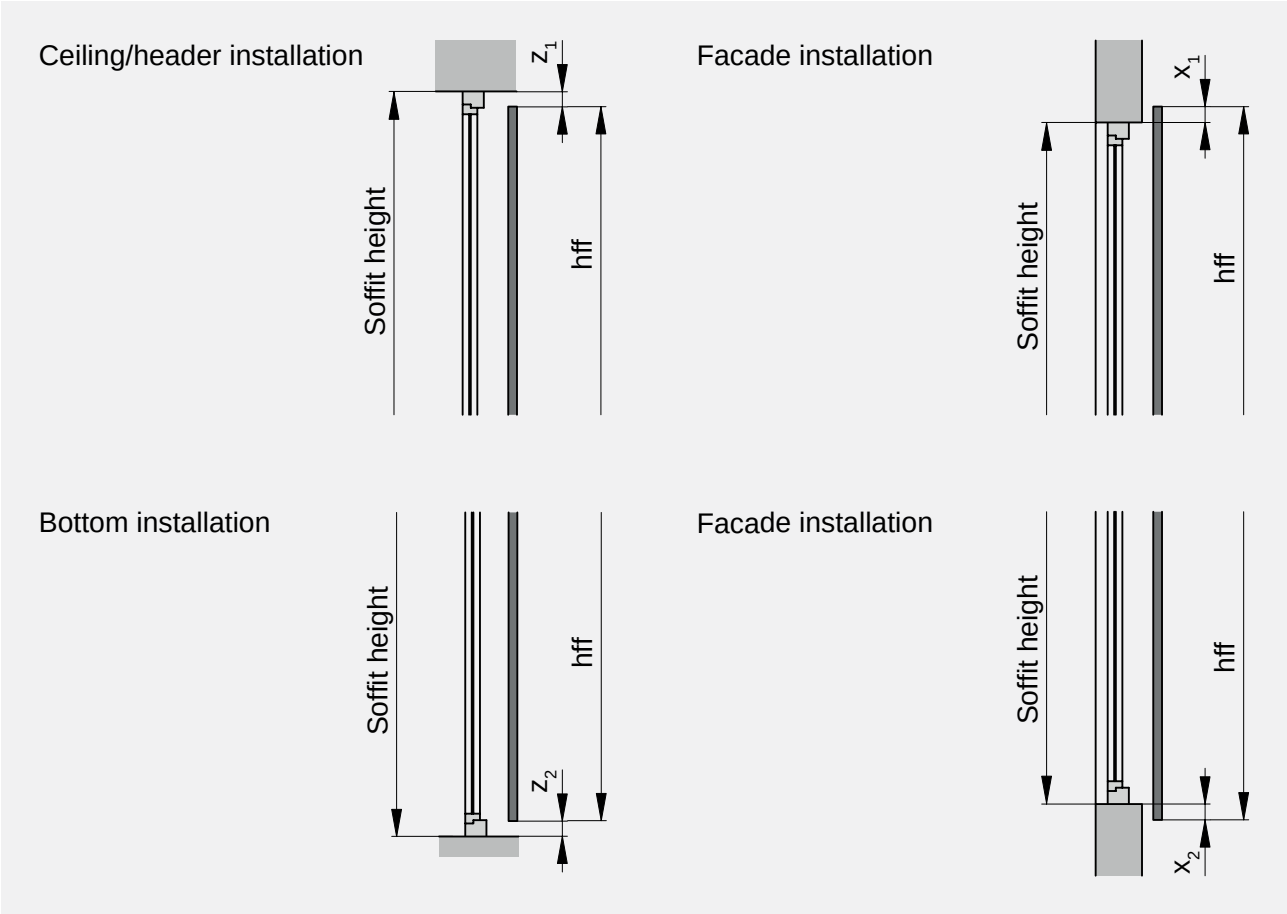

hff = (Soffit height + Σx – Σz)

hff: Finished sash height

x: Sash protrusion

z Sash shortfall

V1.2.0 | 20150901

Scheme 1L | 1R

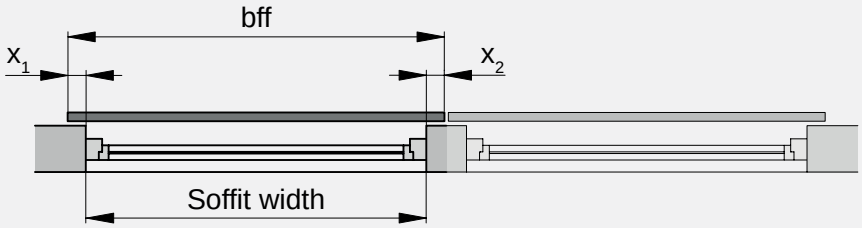

Scheme 2L | 2R

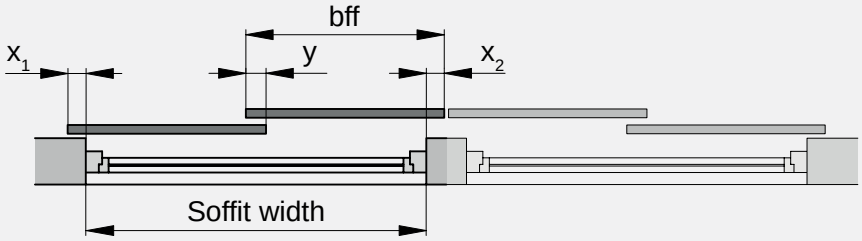

Scheme 3L | 3R

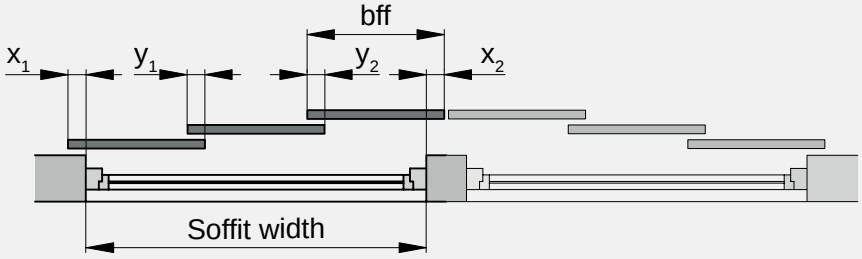

$$bff = \frac{(\text{Soffit width} + \Sigma x + \Sigma y)}{\text{Number of sashs}}$$

Scheme 2

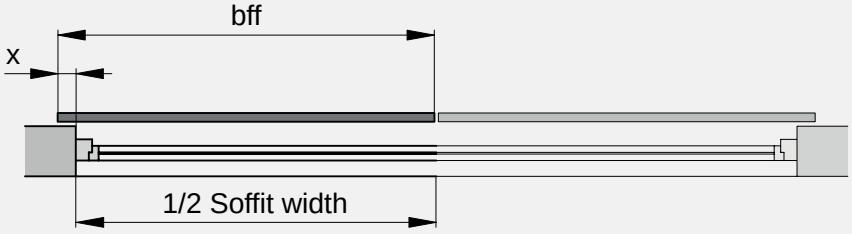

Scheme 4

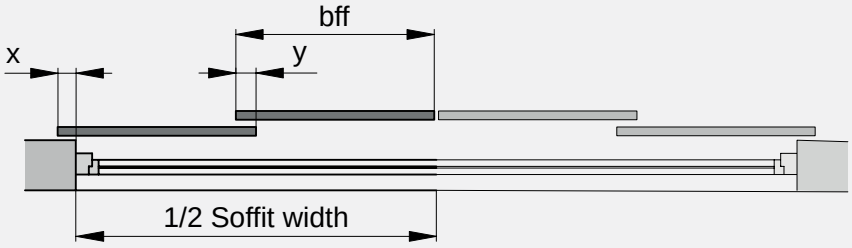

$$bff = \frac{(\tfrac{1}{2}\,\text{Soffit width} + x + y)}{\text{Number of sashs}}$$

bff: Finished sash width

x: Sash protrusion

y Sash overlap

INSTALLATION SITUATIONS AT TOP

Vertical section: Ceiling/header installation (DM)

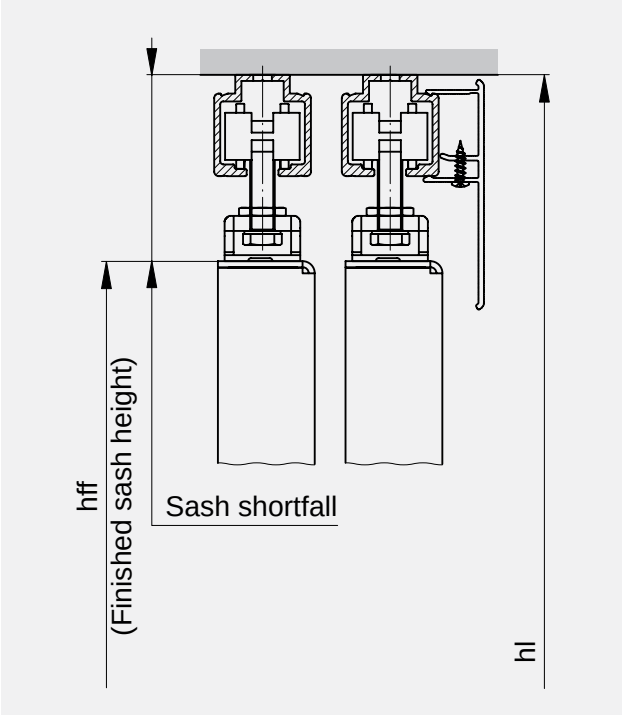

Illustrated version:
without motor, runner rail type K

with motor, runner rail type G

Vertical sections: Facade installation

Angle installation (WM)

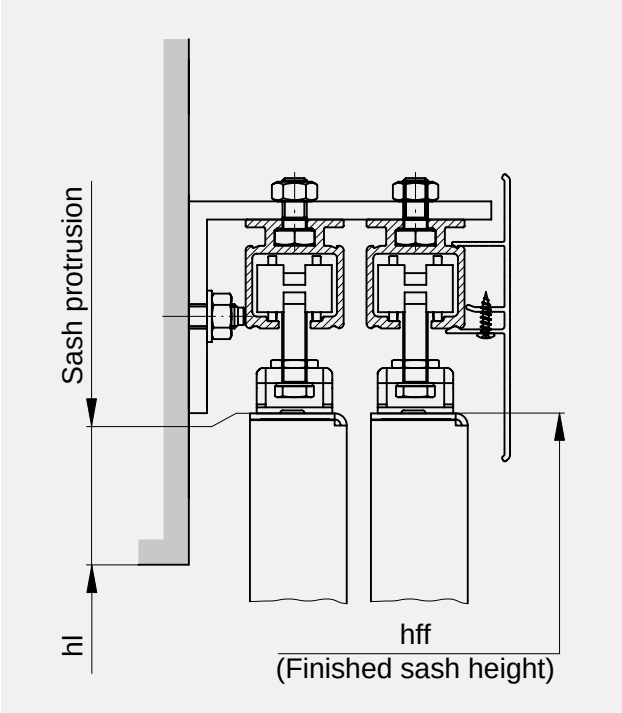

Beam installation (TM)

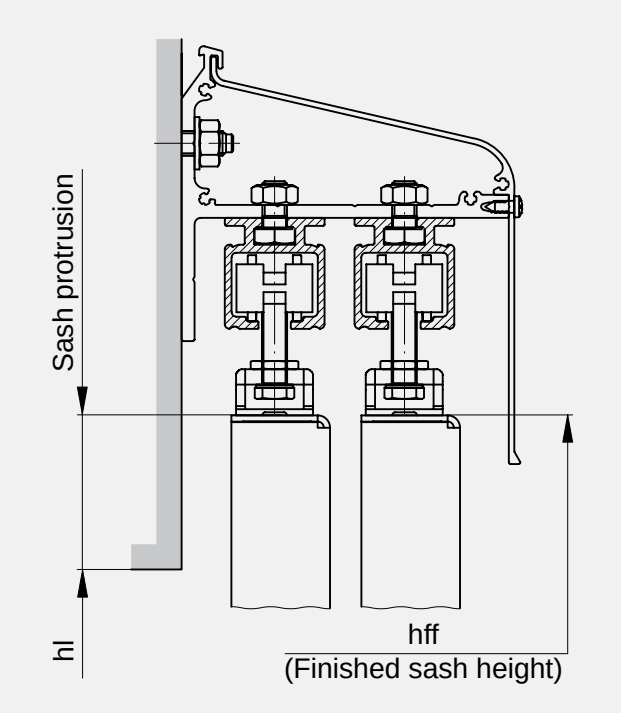

Sections / Details 104

V1.2.0 | 20150901

INSTALLATION SITUATIONS AT BOTTOM

Vertical sections: Bottom installation

Situation 1

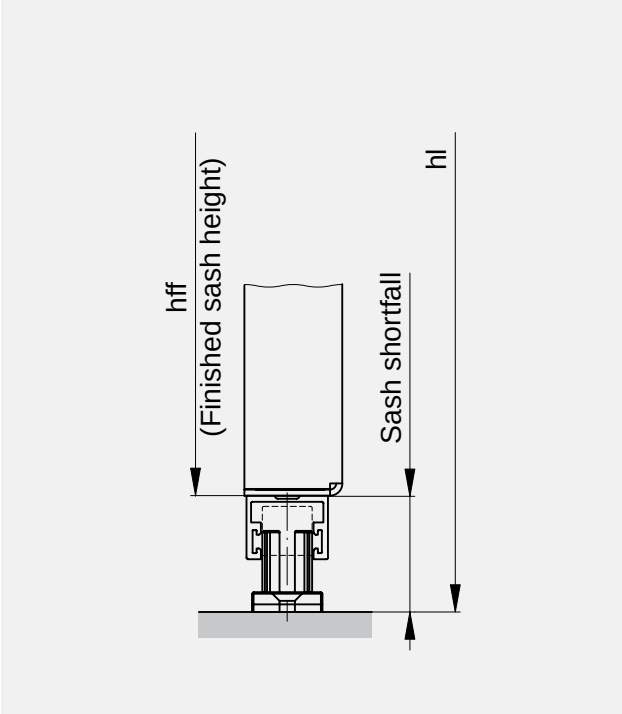

Situation 2

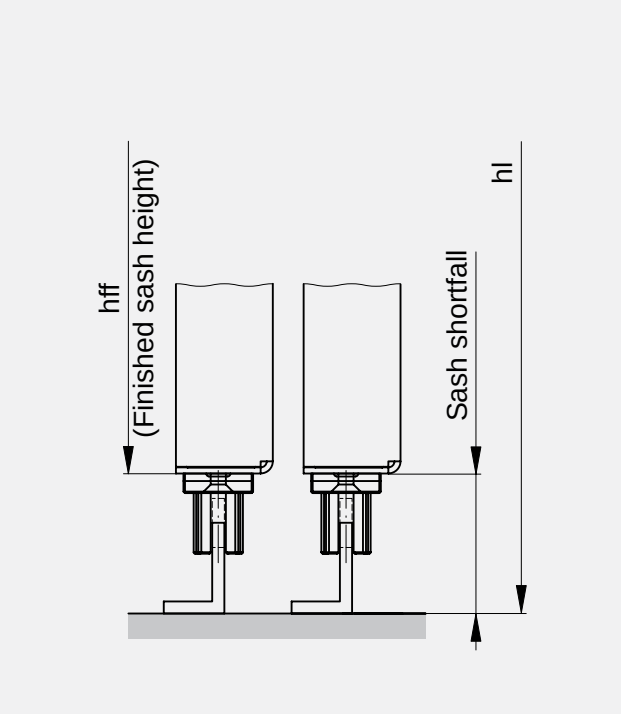

Vertical sections: Facade installation

Situation 3

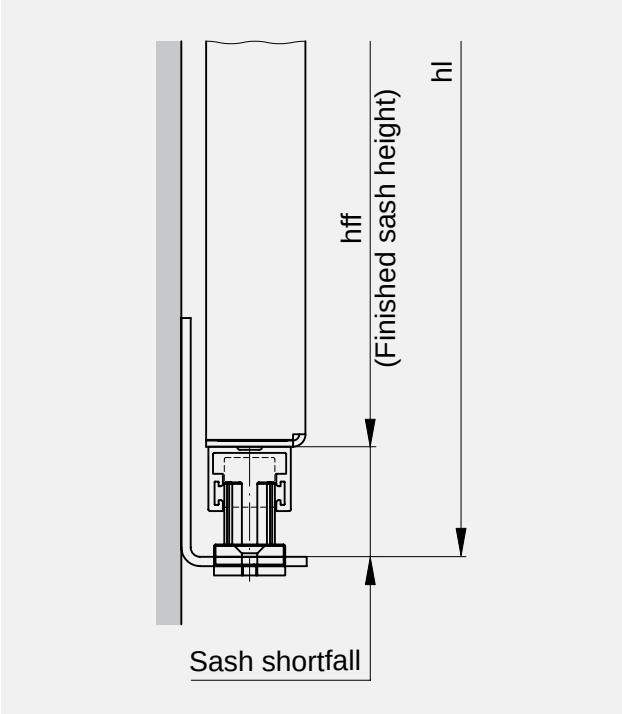

Situation 4

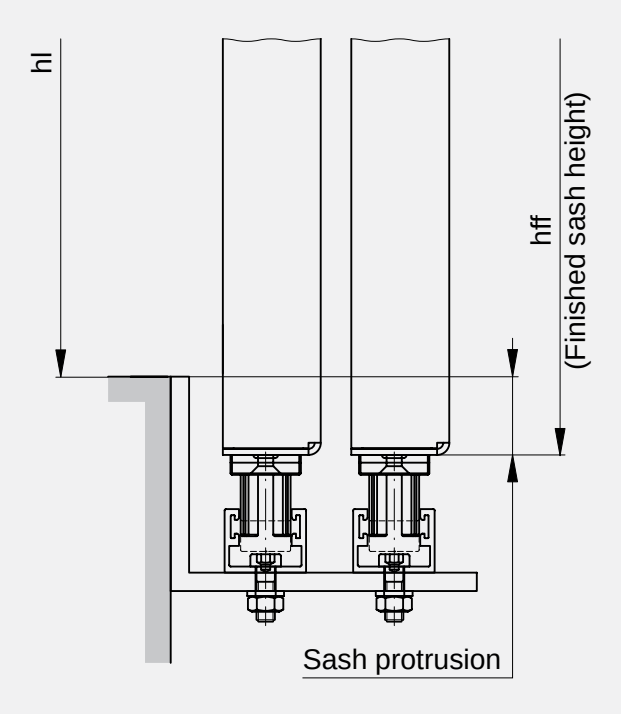

Situation 5

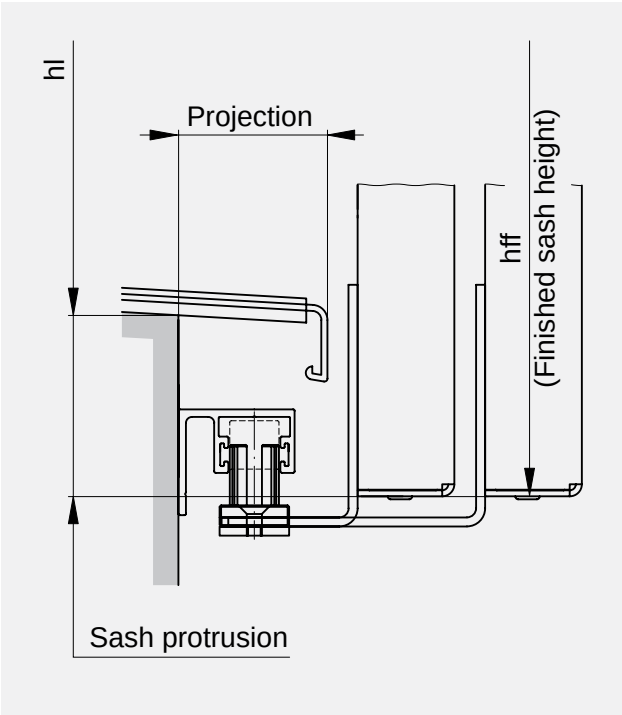

Situation 6

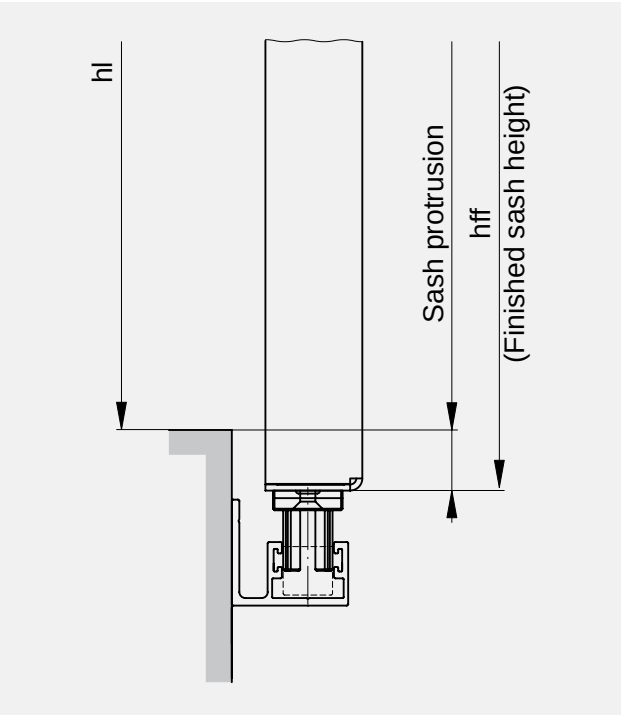

RUNNER RAILS

Type G

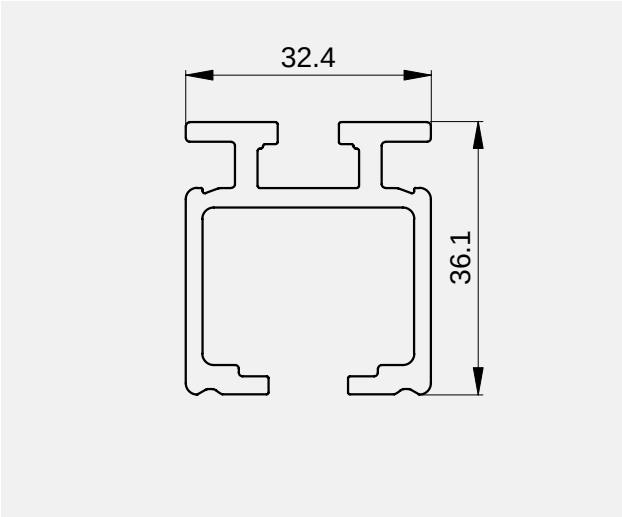

Type G | 100kg

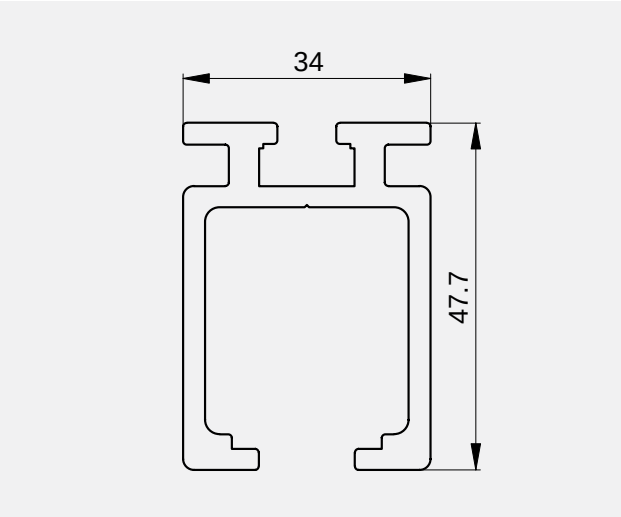

Type K

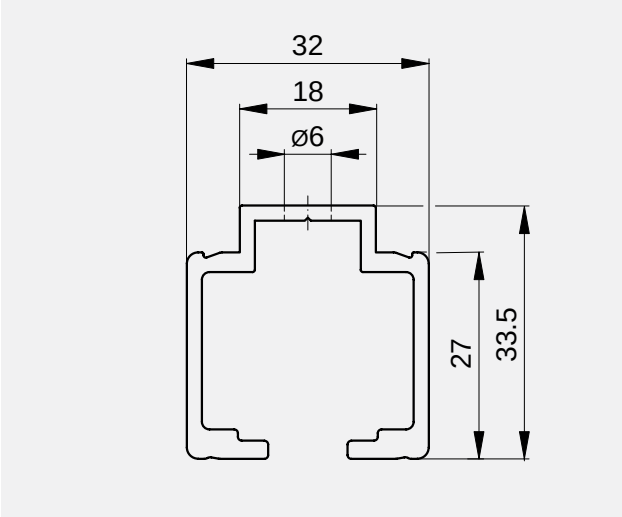

ceiling installation only (DM), without motor

GUIDE RAILS

Type G | Bottom installation

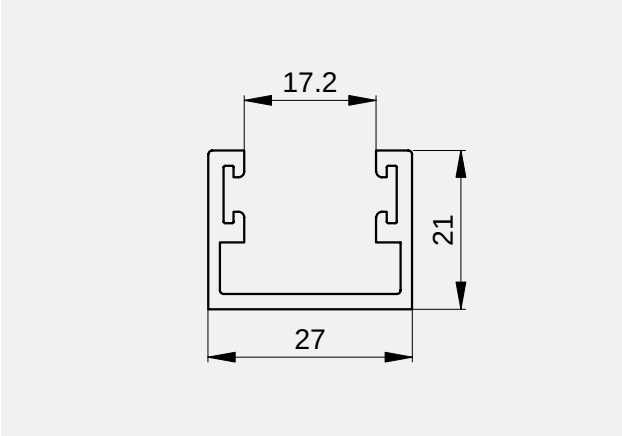

Type G-W | Facade installation

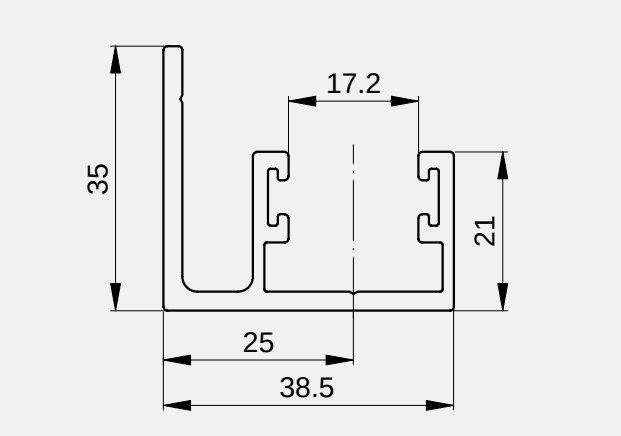

Type L

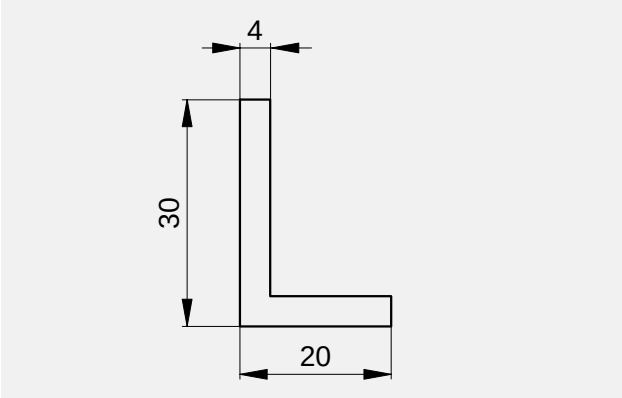

Type Z

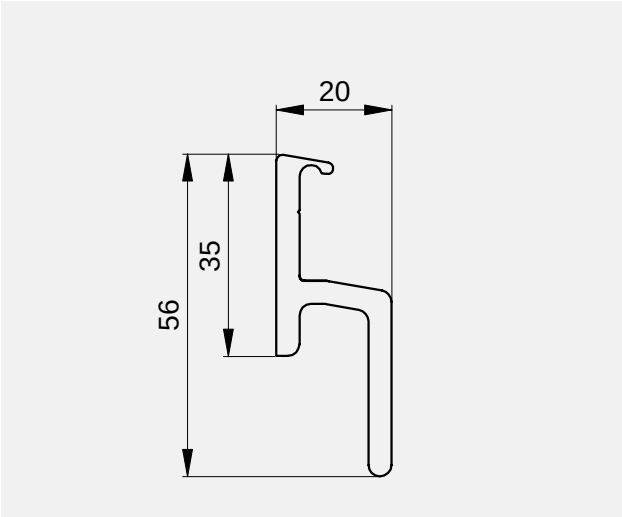

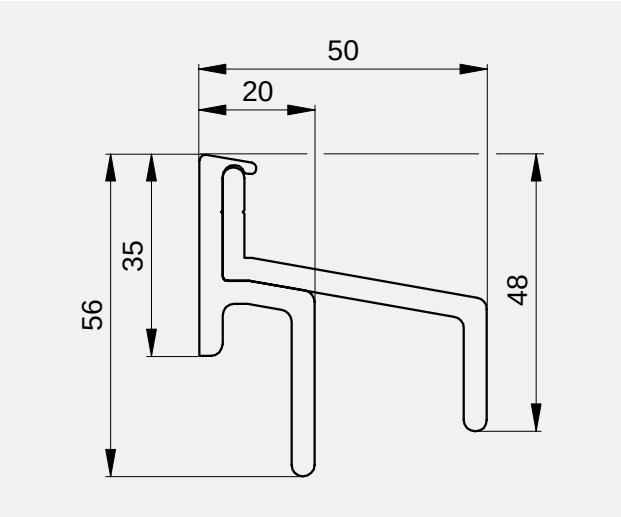

POINT GUIDES

Type G

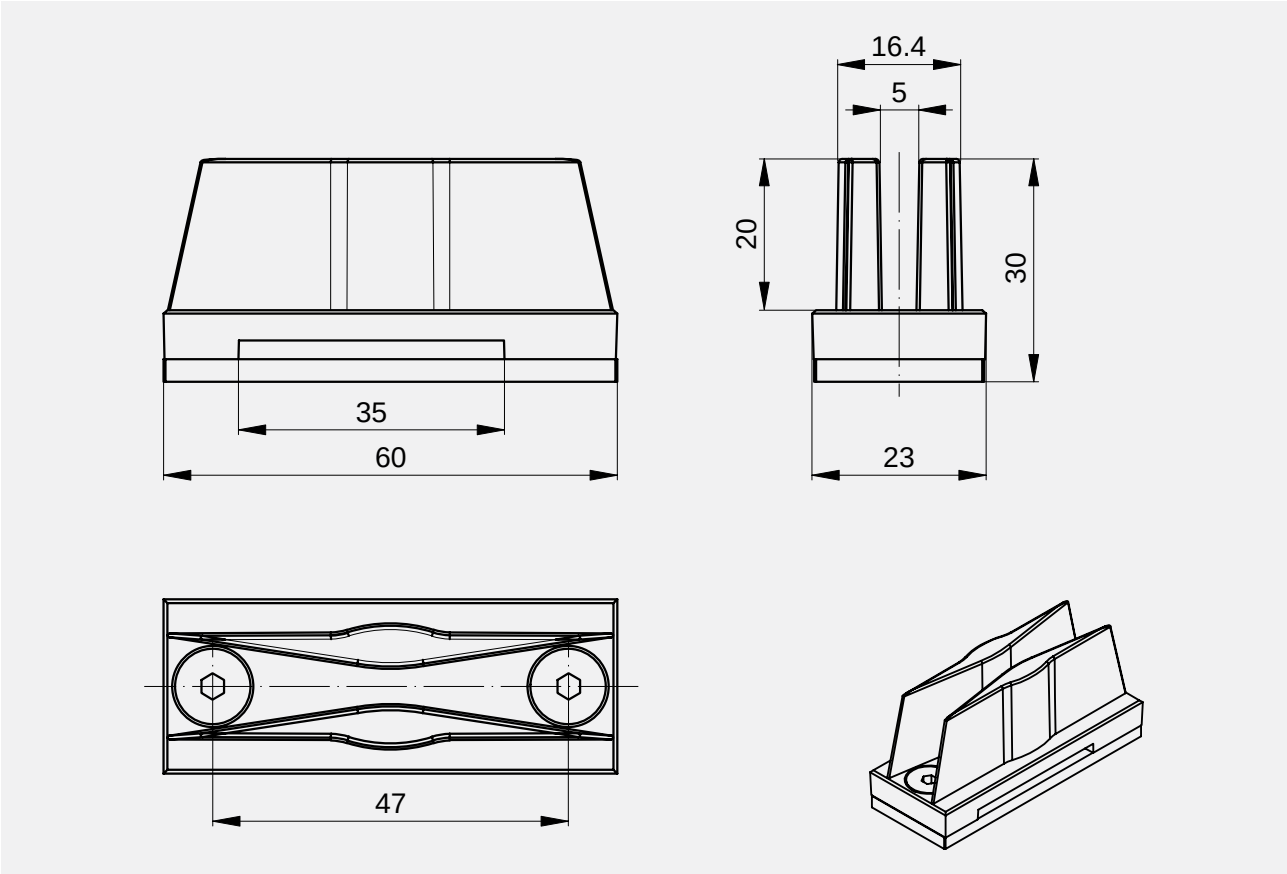

Roller bolt

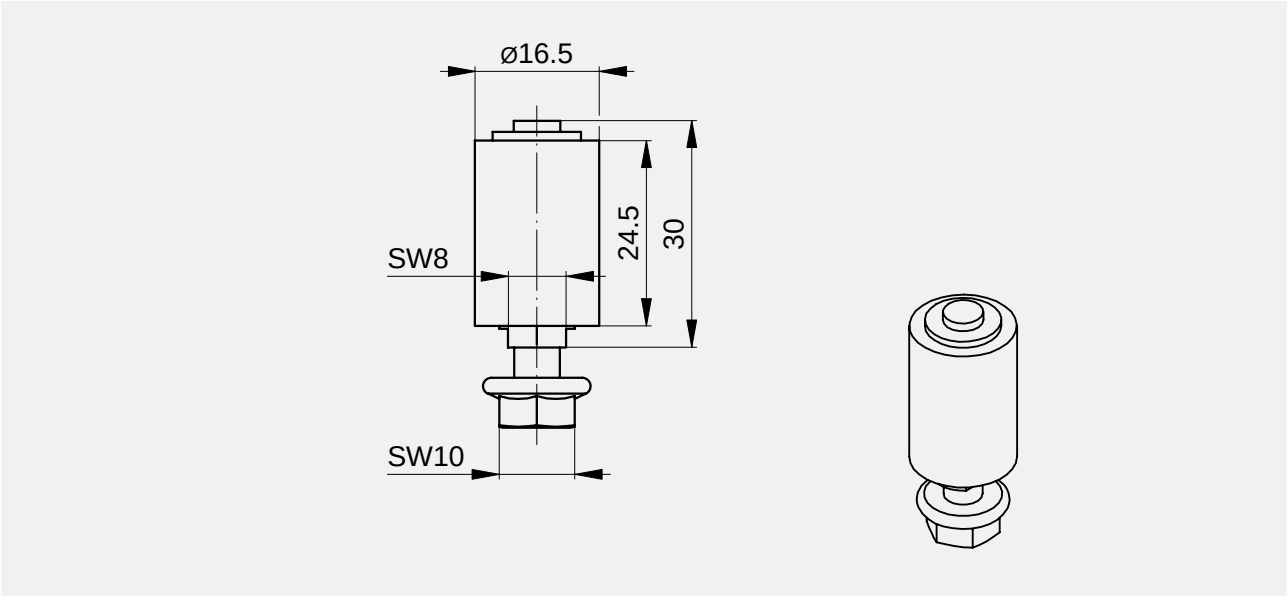

Used with guide rails type G and type G-W

SECTIONS / DETAILS: INSTALLATION SITUATIONS AT TOP

Vertical section: Ceiling/header installation (DM)

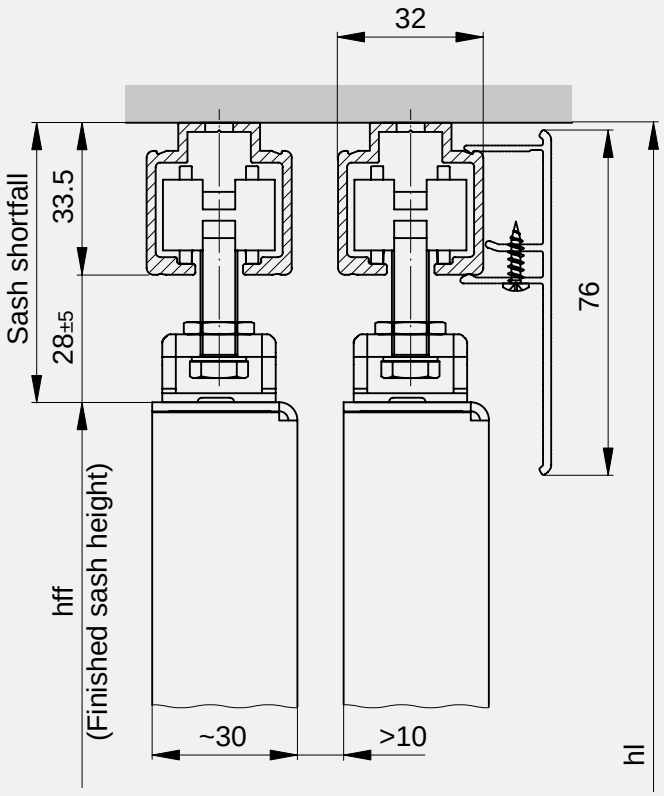

Vertical sections: Facade installation

Angle installation (WM)

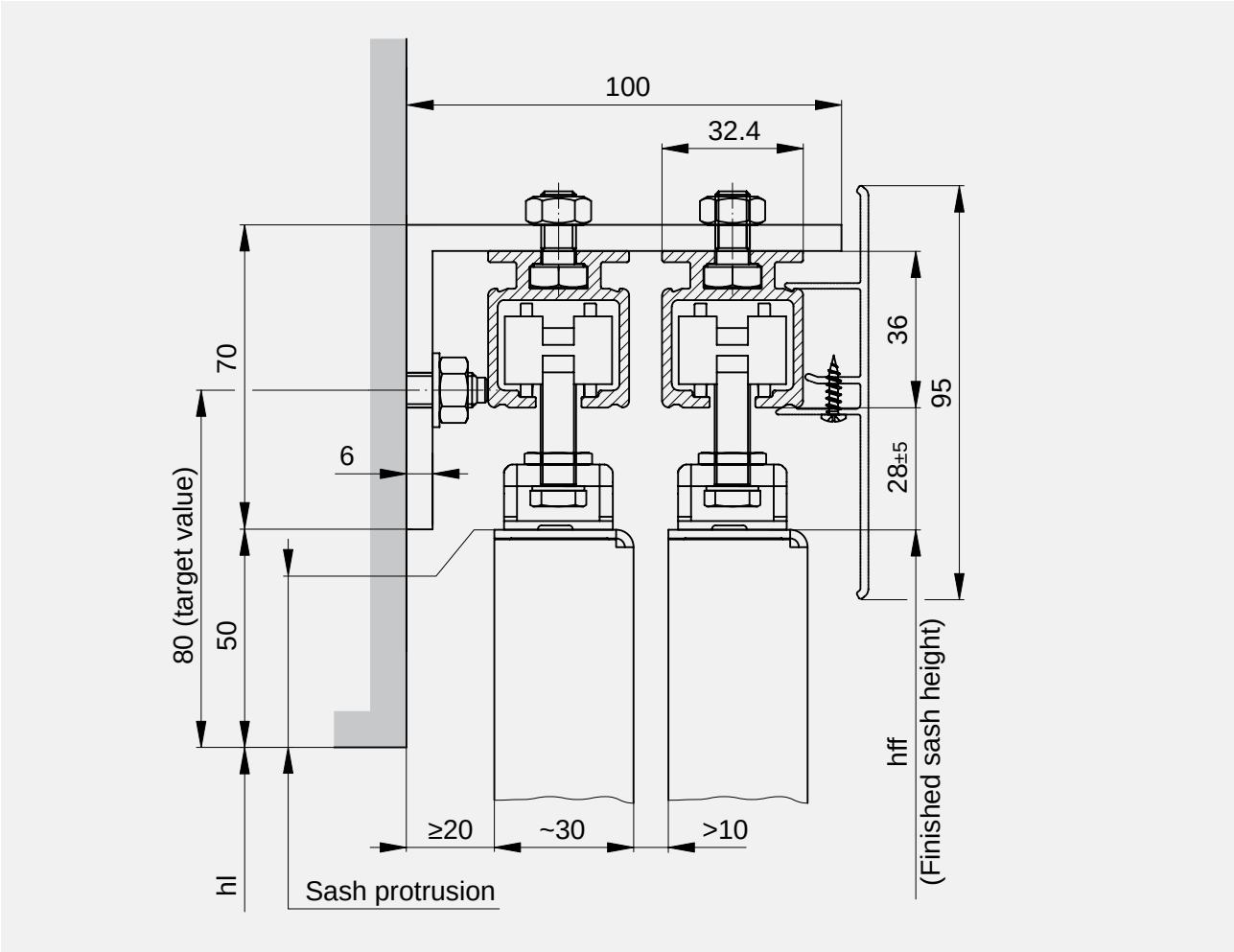

Beam installation (TM)

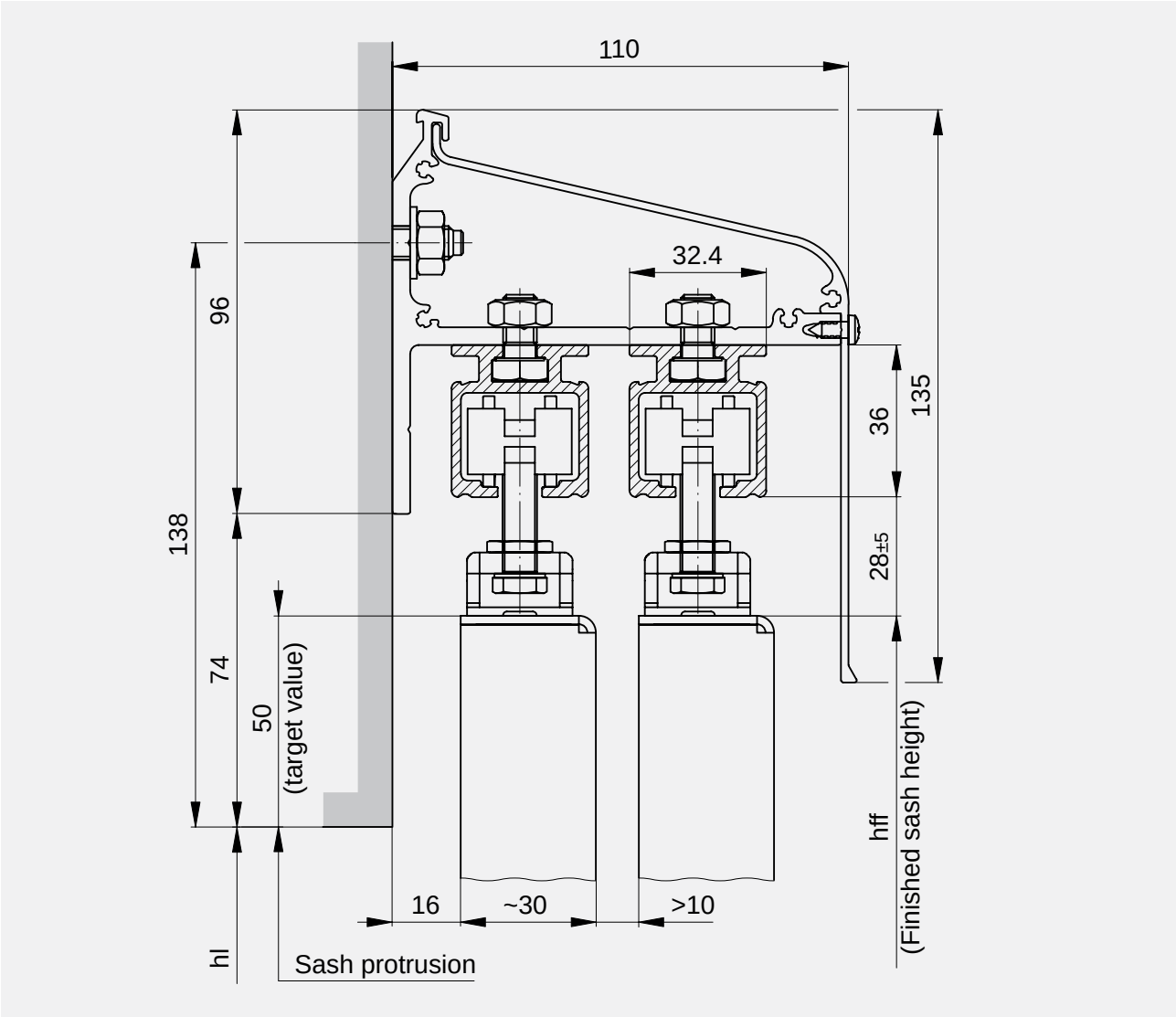

SECTIONS / DETAILS: INSTALLATION SITUATIONS AT BOTTOM

Vertical sections: Bottom installation

Situation 1

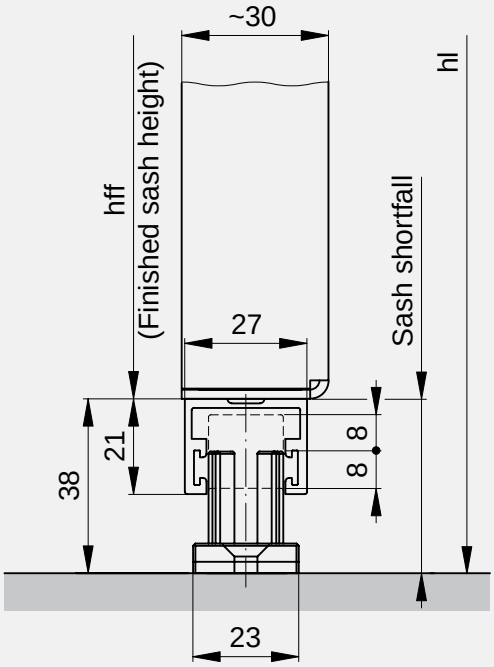

Situation 2

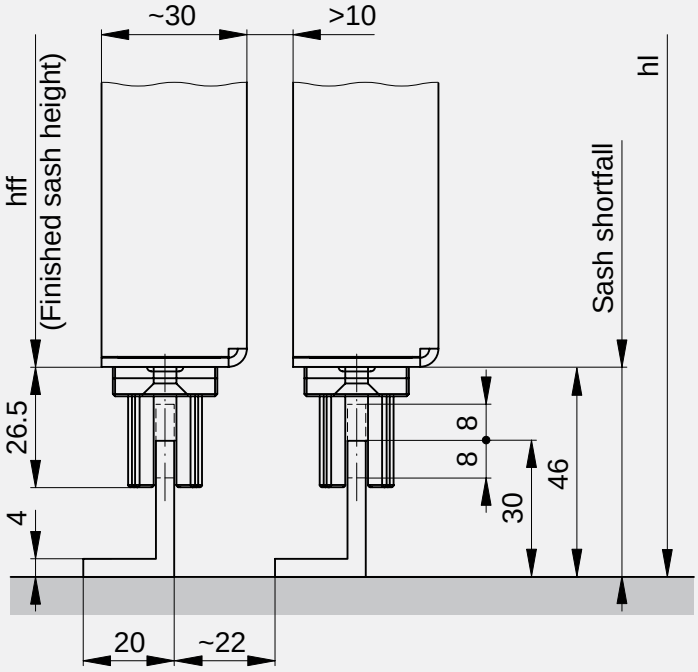

Vertical sections: Facade installation

Situation 3

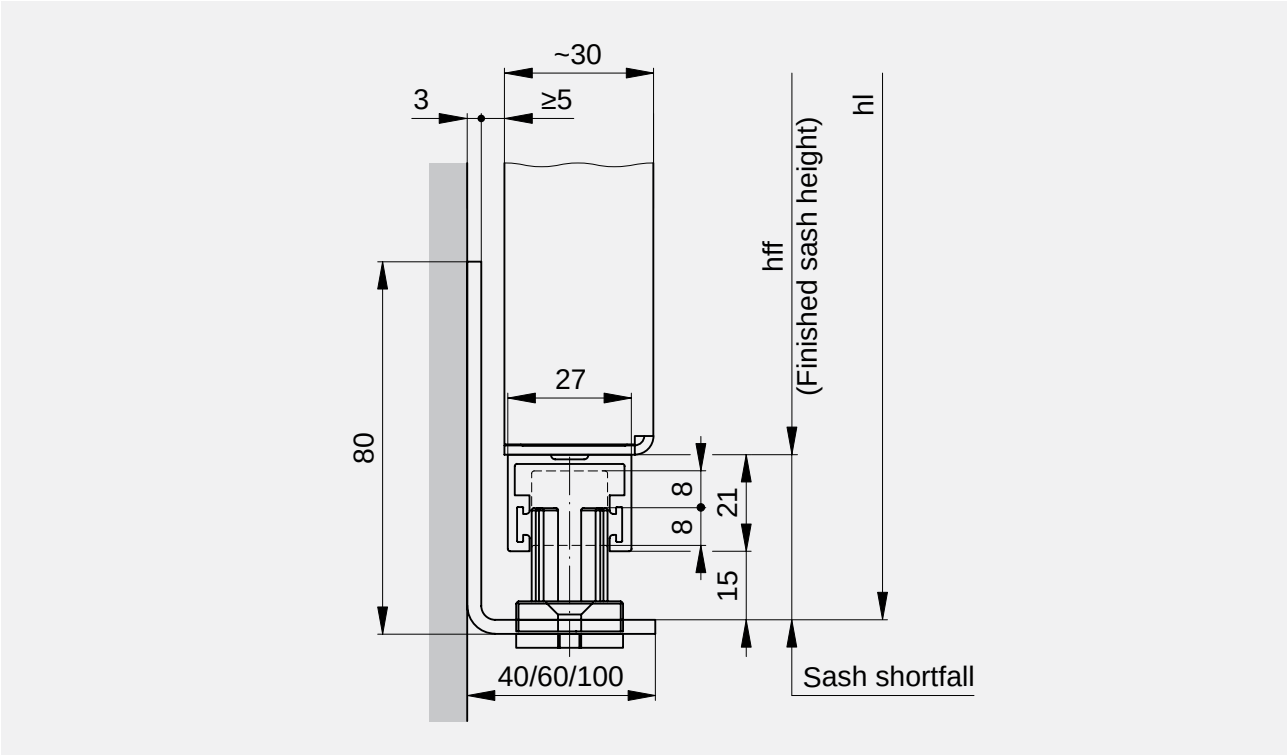

Situation 4

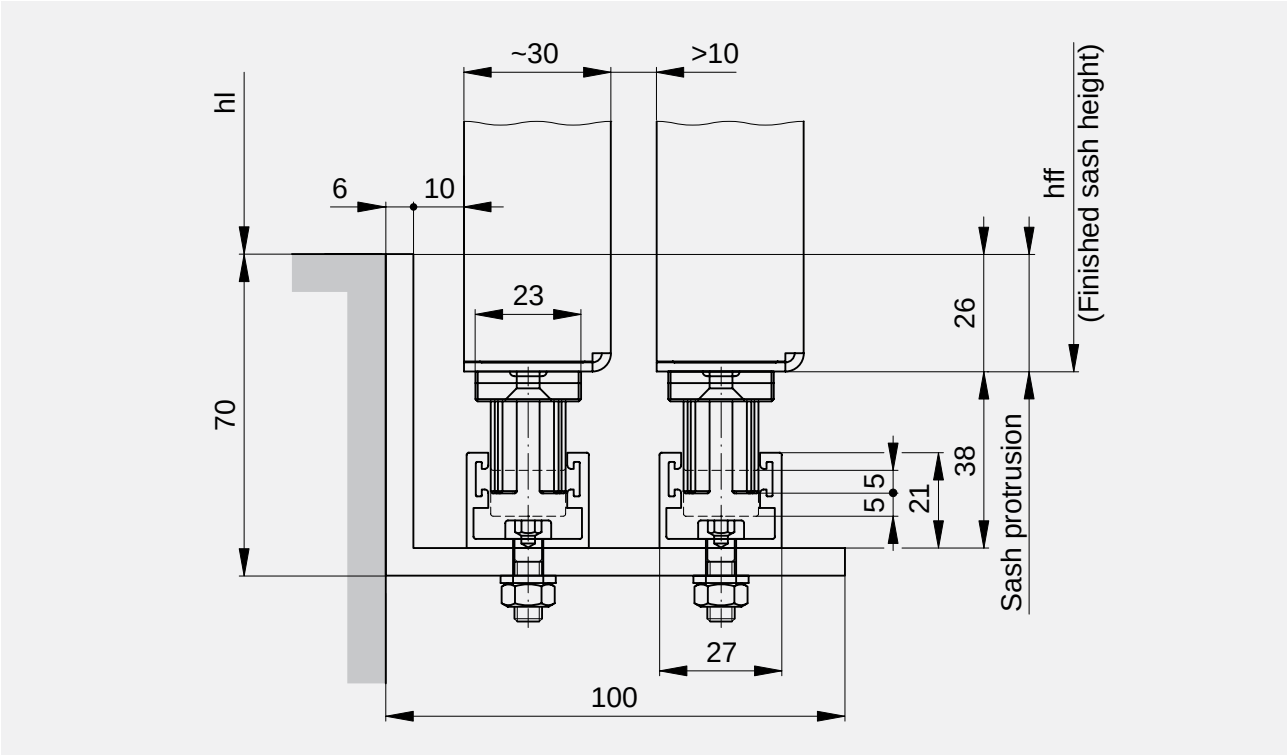

V1.2.0 | 20150901

Situation 5

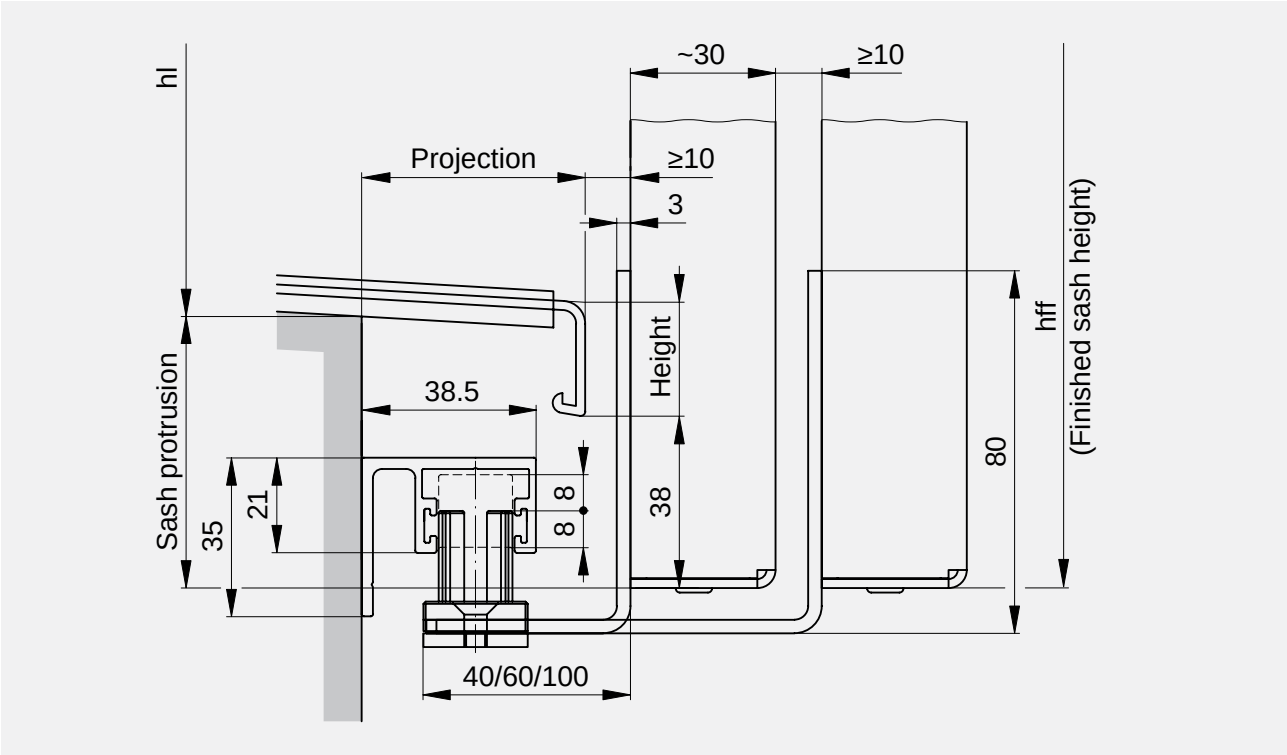

Situation 6

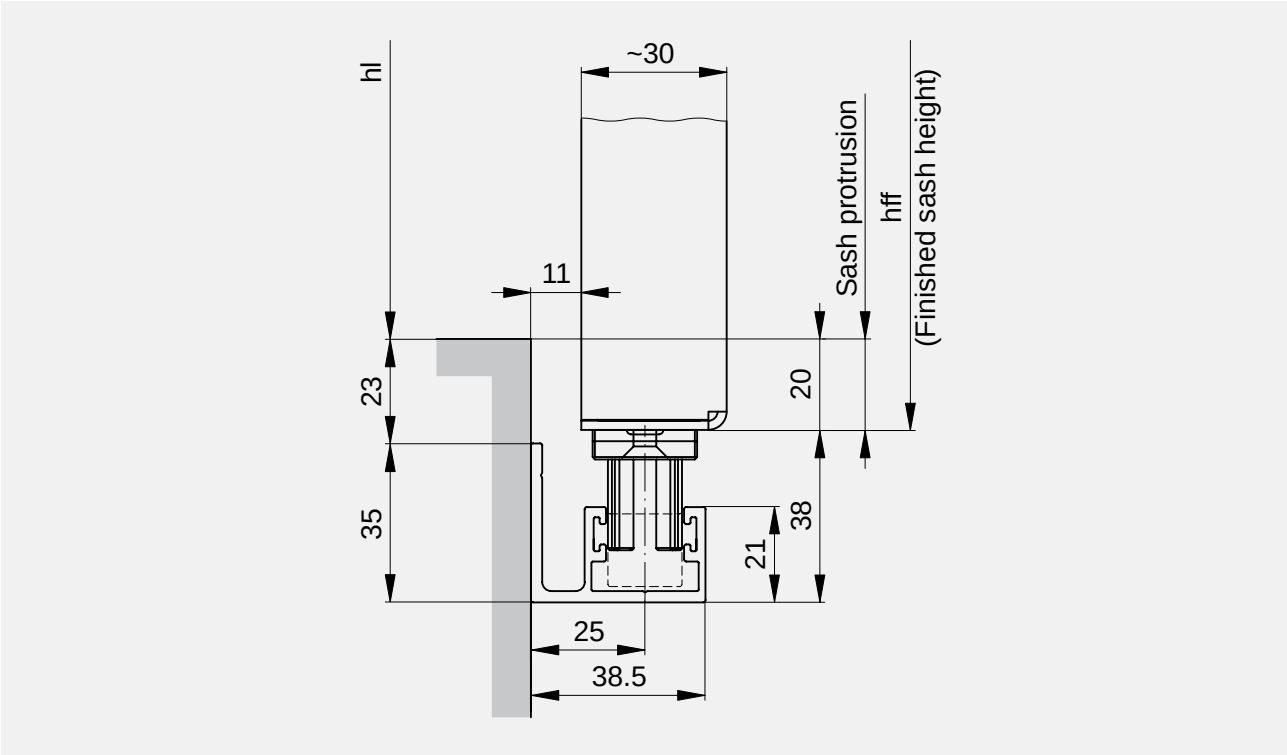

END STOP DIAGRAMS

Scheme 1

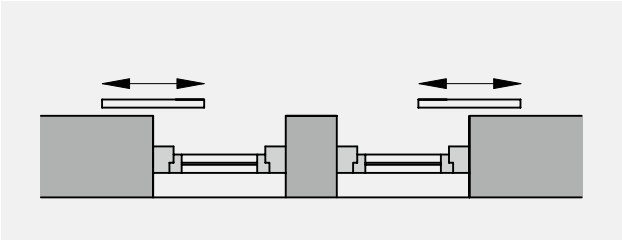

Scheme 1L | 1R

Scheme 2

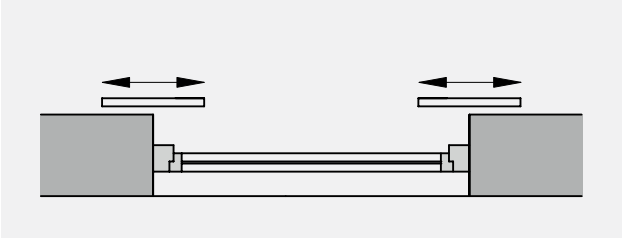

Scheme 2

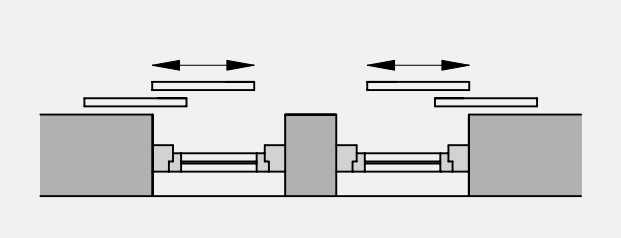

Scheme 2L | 2R

Scheme 3

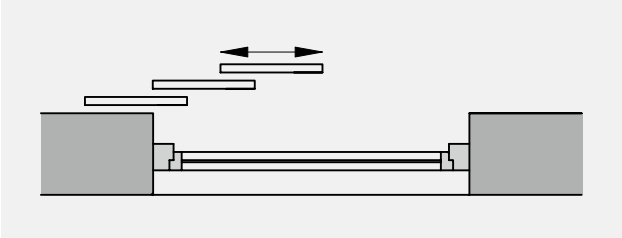

Scheme 3L

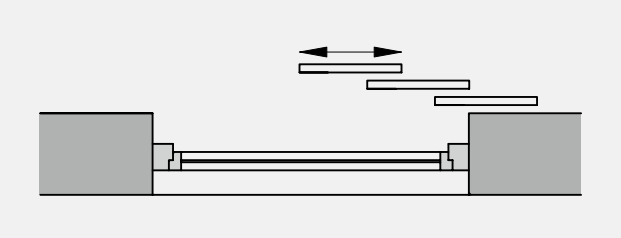

Scheme 3R

Scheme 4

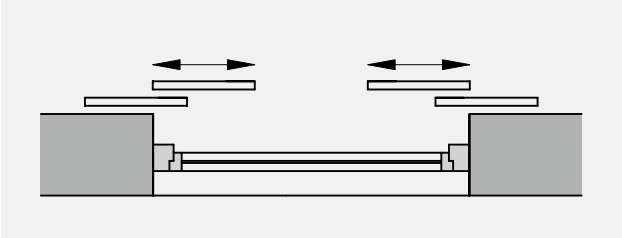

Scheme 4

Limit dimensions 90

V1.2.0 | 20150901

SASH PROTRUSION / SASH OVERLAP

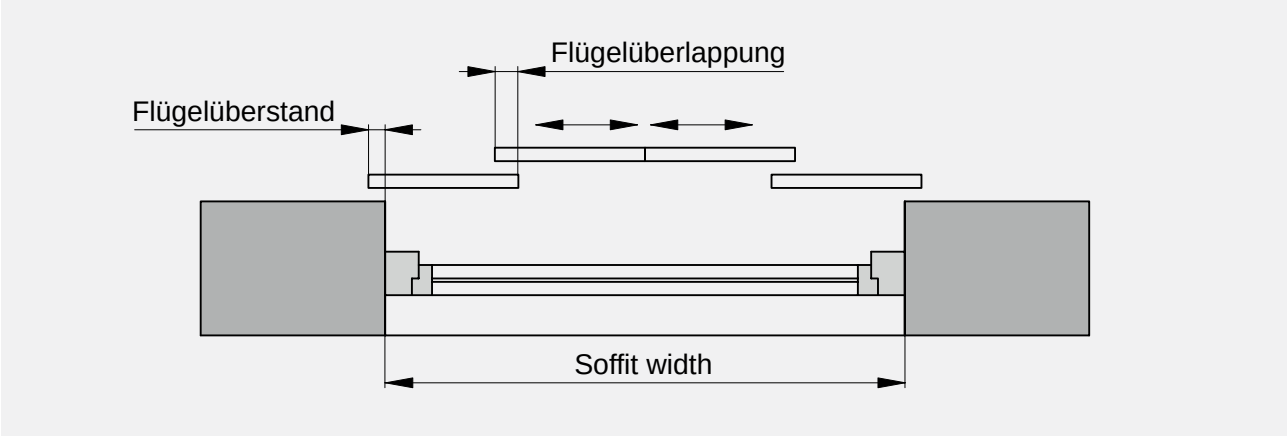

Sash protrusion standard	Sash overlap standard		
	Frame width 70	Frame width 55	Frame width 40
50	70	58	40

FRIEZE

Horizontal frieze

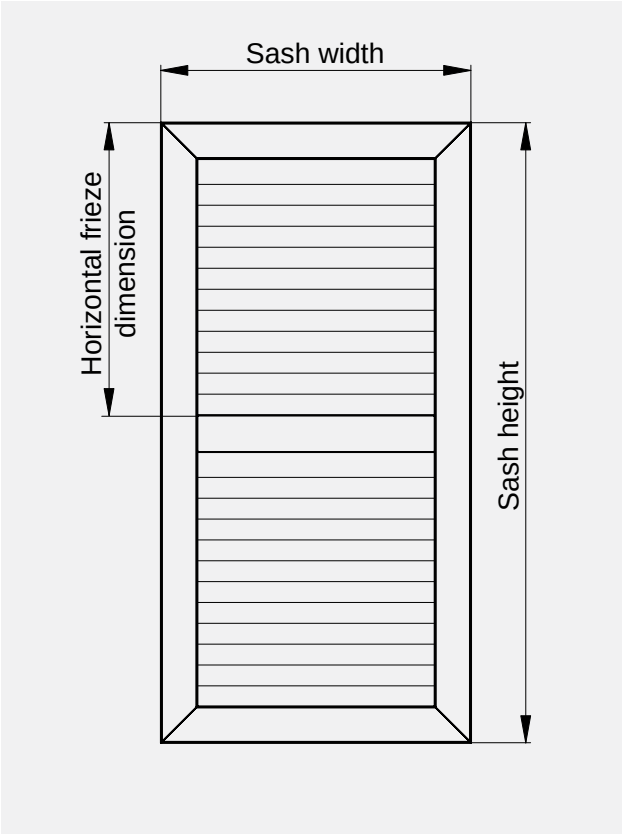

Vertical frieze

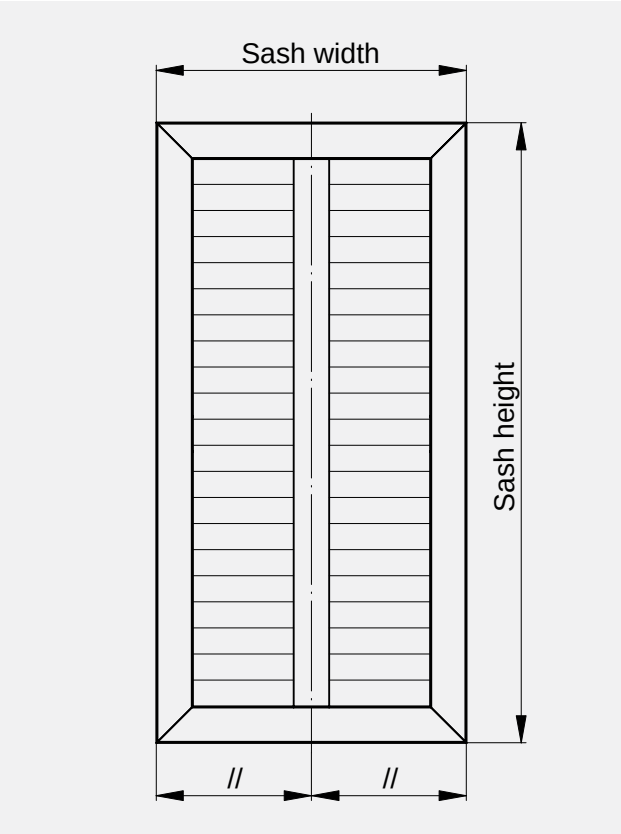

Horizontal frieze dimension min.
300

SUSPENSION BRACKETS FOR RUNNER RAIL INSTALLATION

1-track

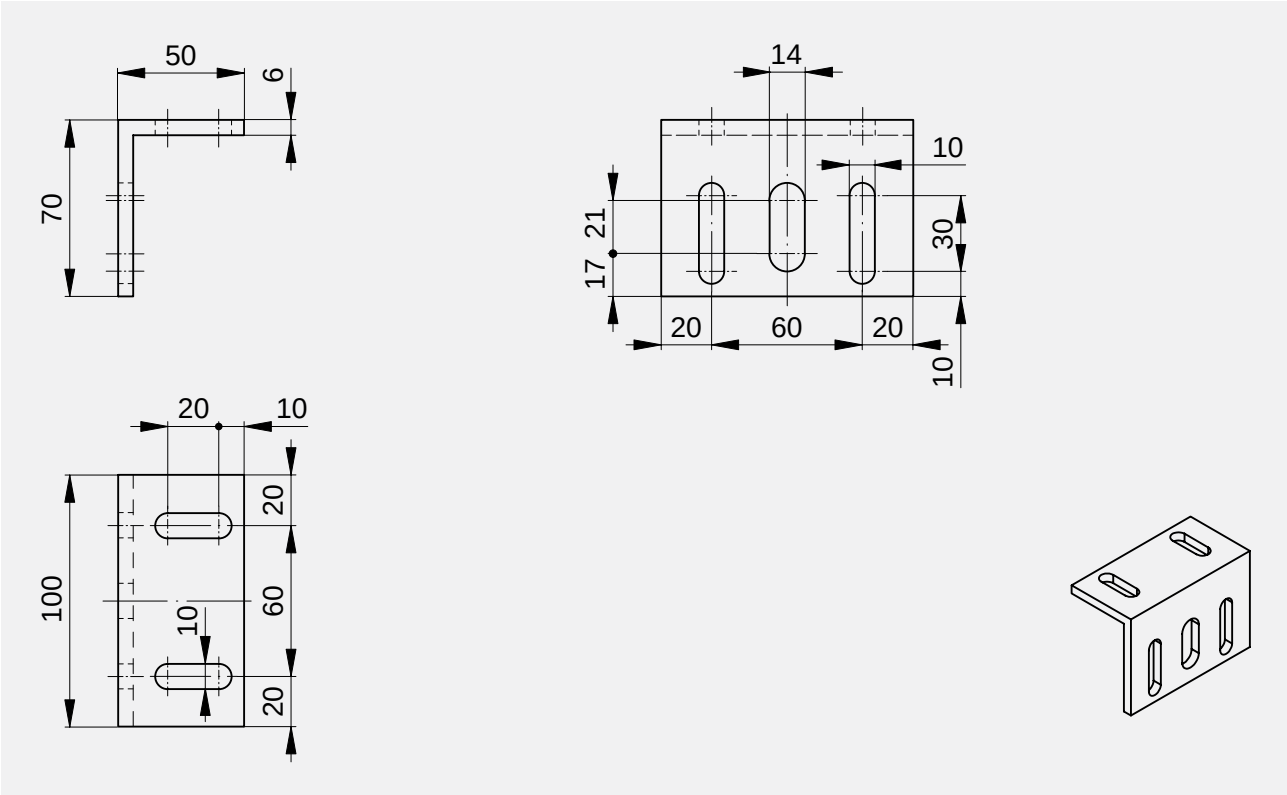

2-tracks

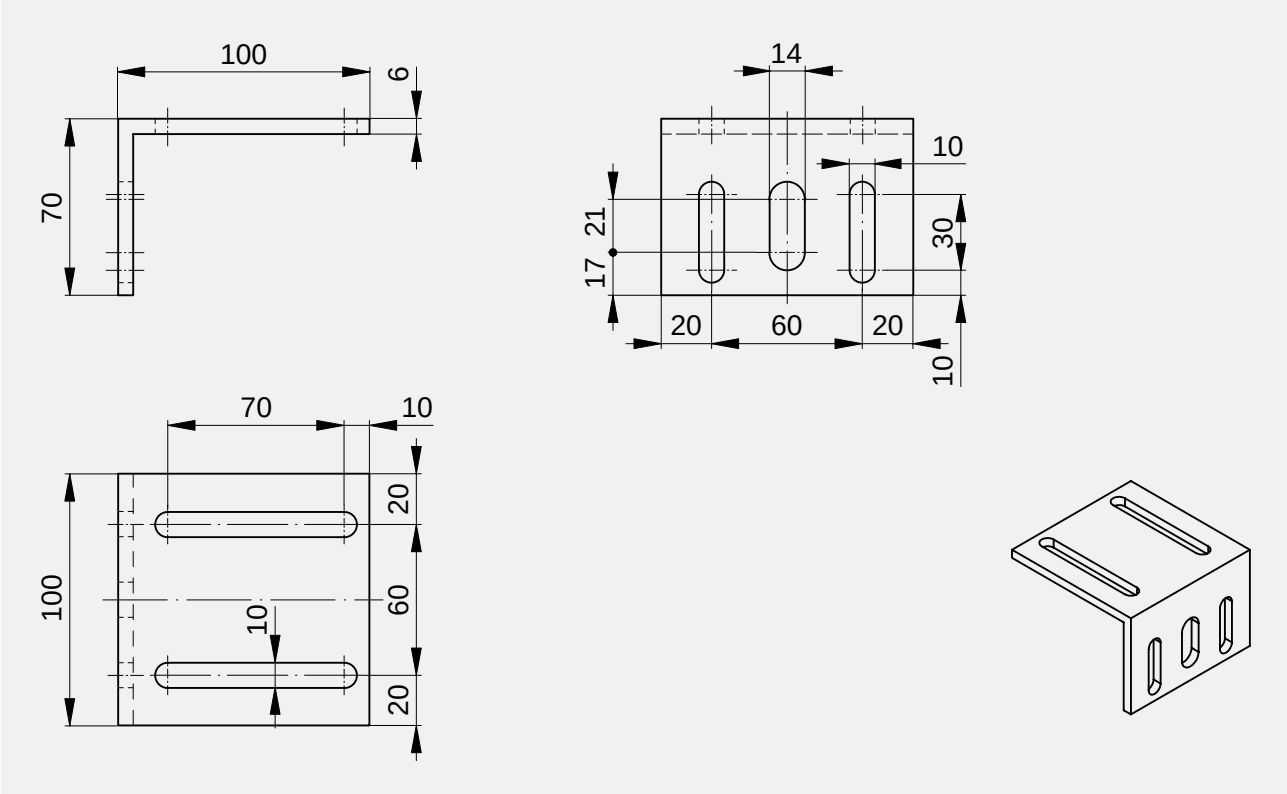

3-tracks

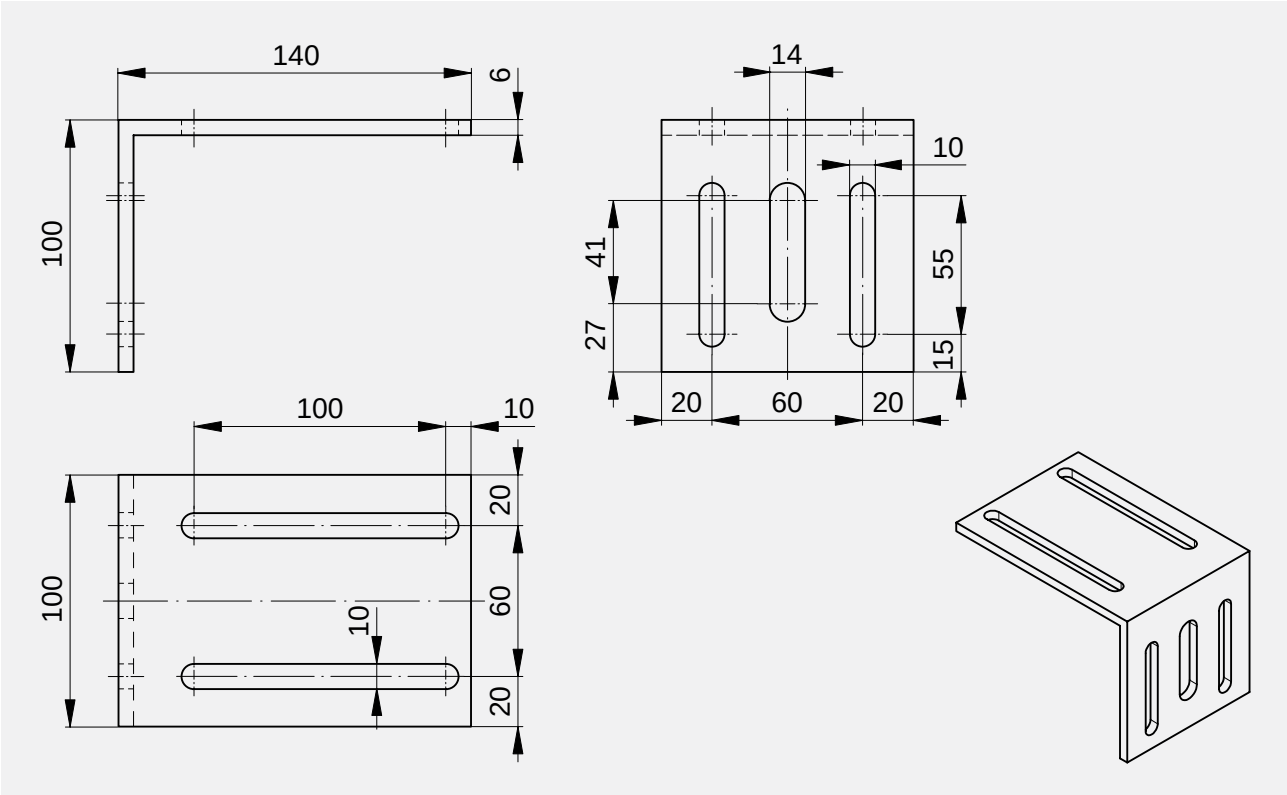

BOTTOM GUIDE BRACKET

1-track

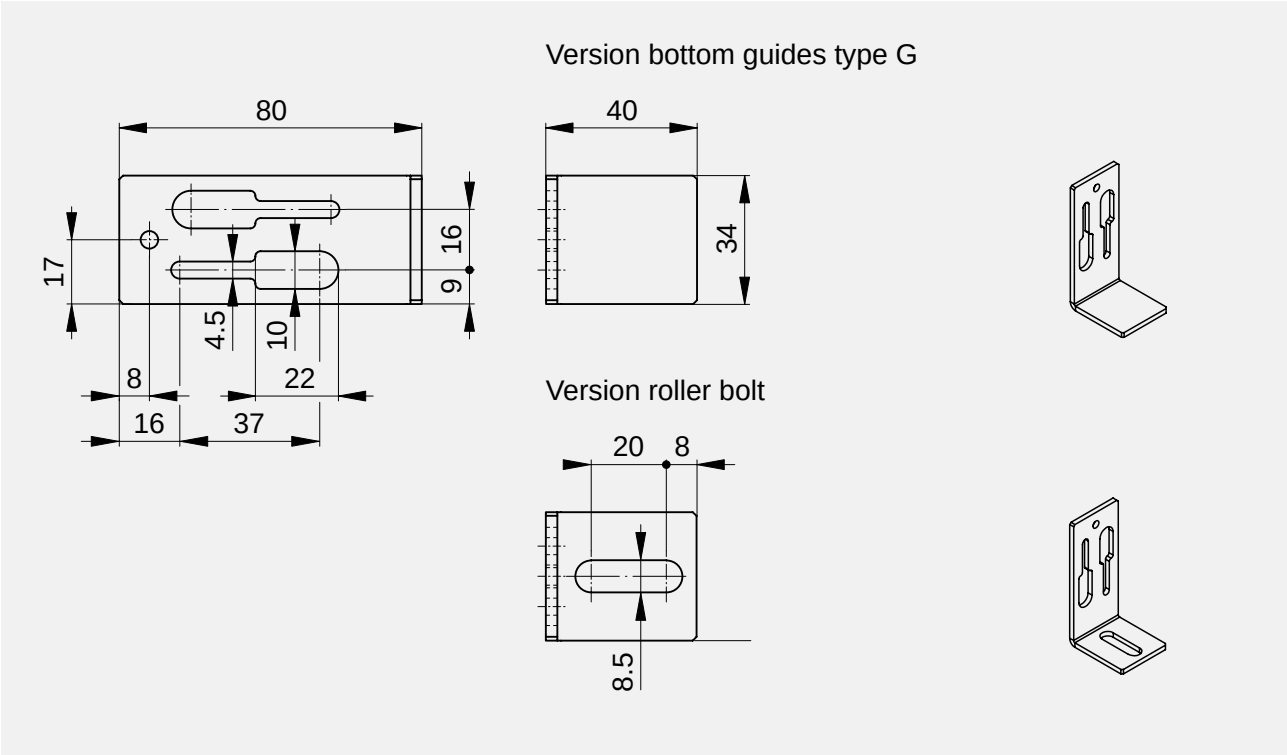

2-tracks

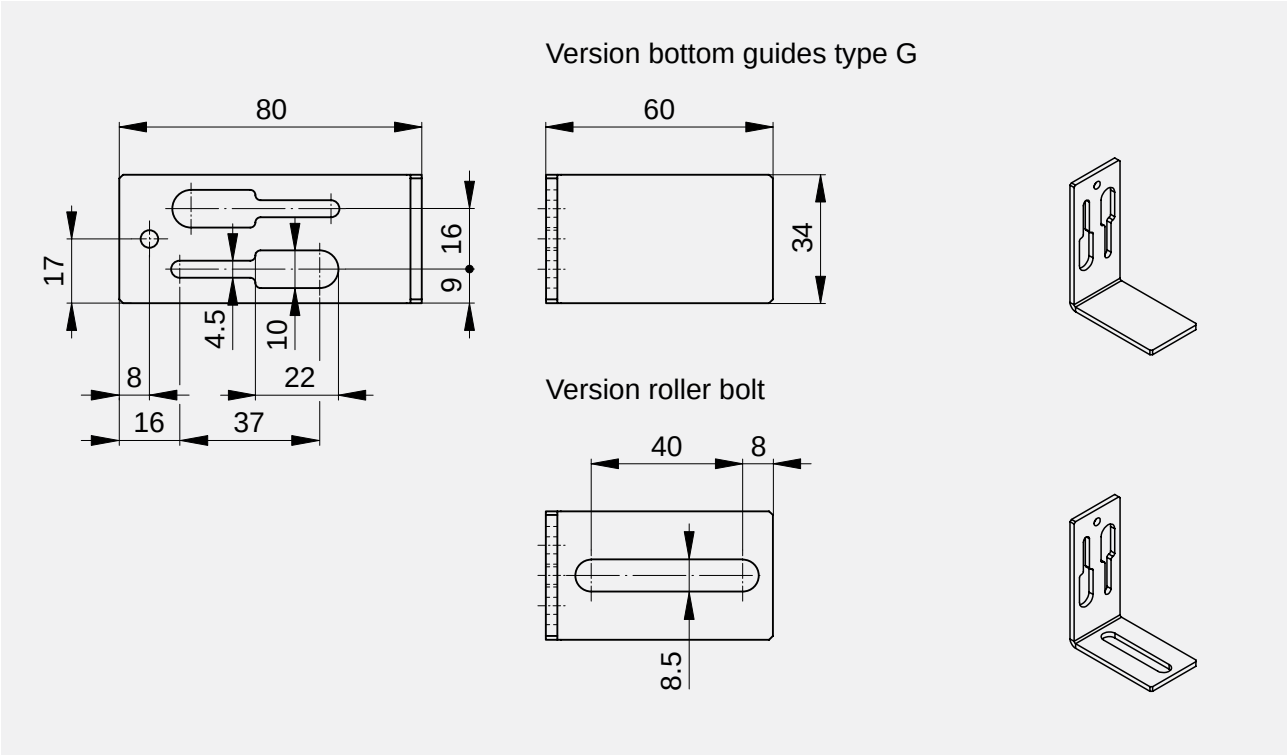

3-tracks

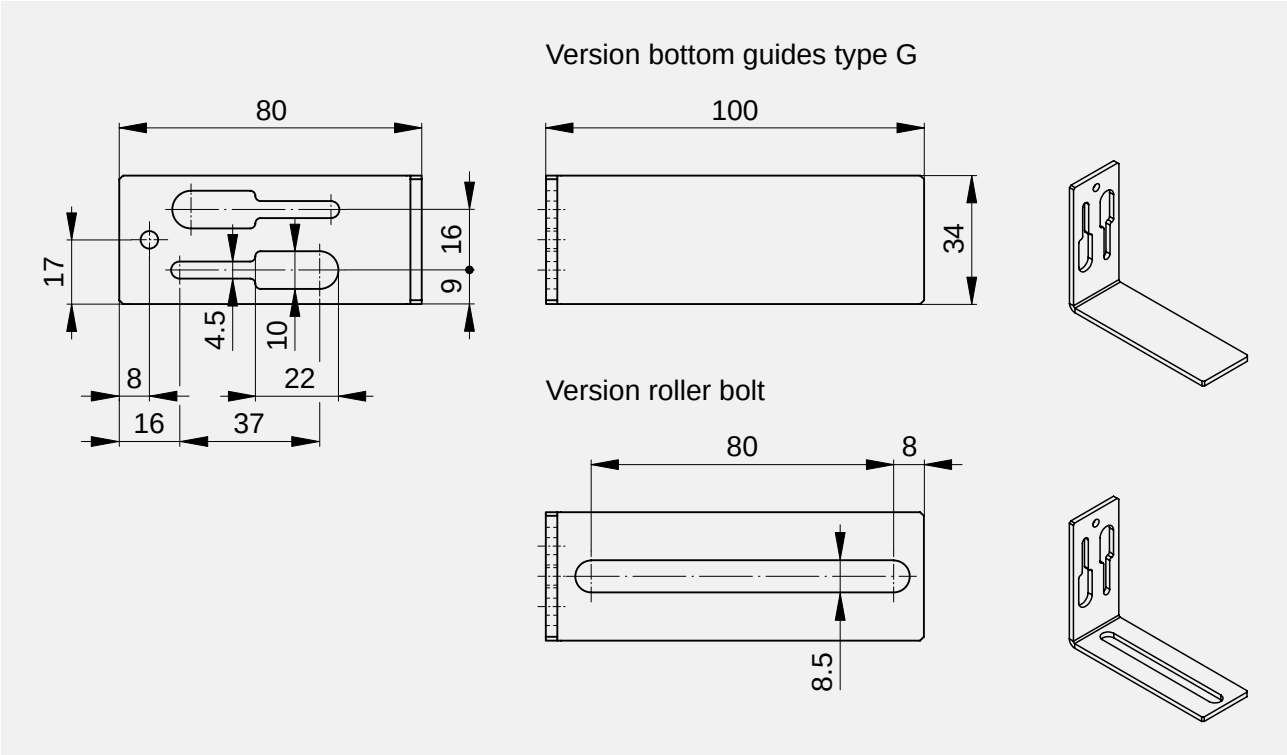
Version bottom guides type G
80
17
16
9
4.5
10
8
22
16
37
100
34
Version roller bolt
80
8
8.5

LOCKERS / STOPPERS

Shutter lock 1 sash

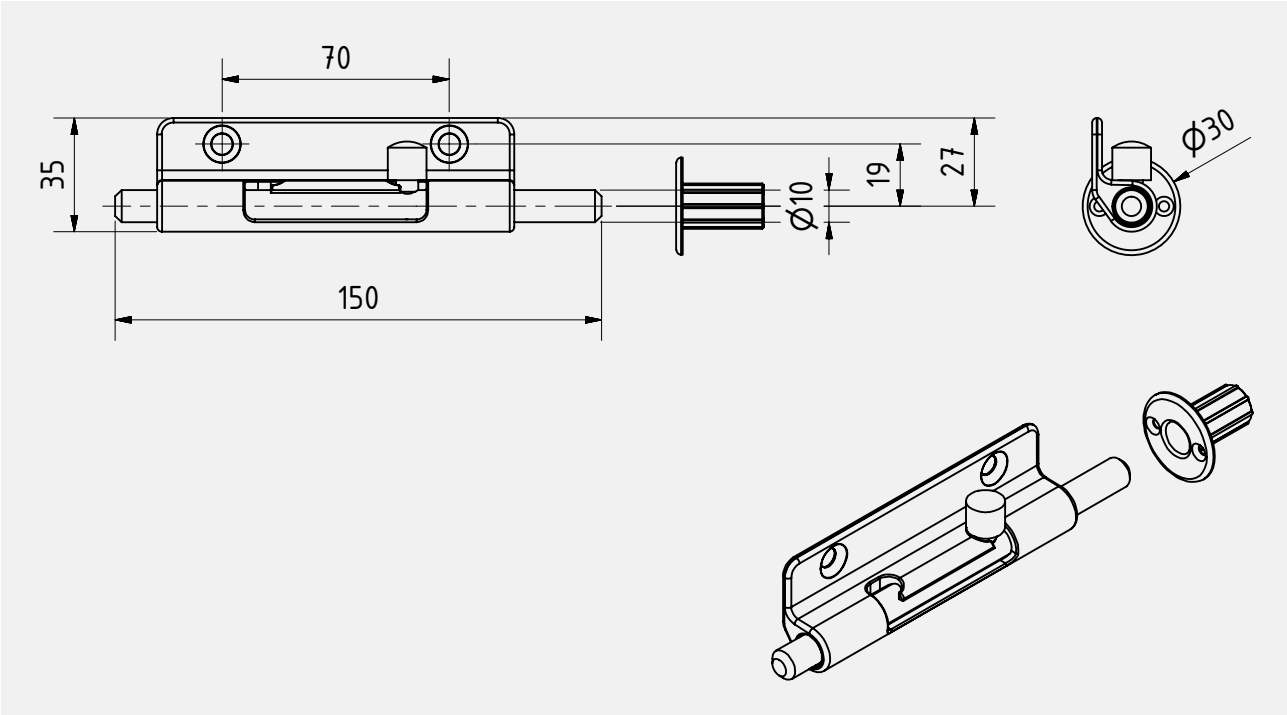

Shutter lock 2 sashs

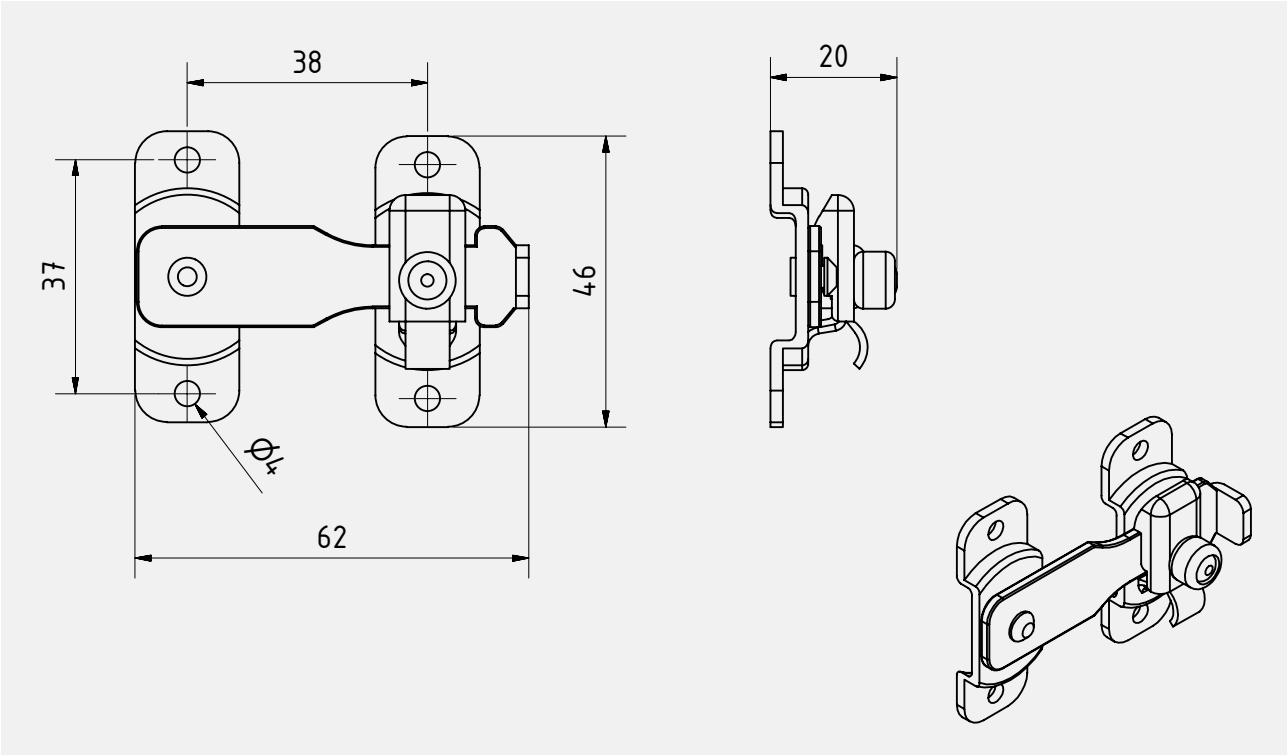

Stopper

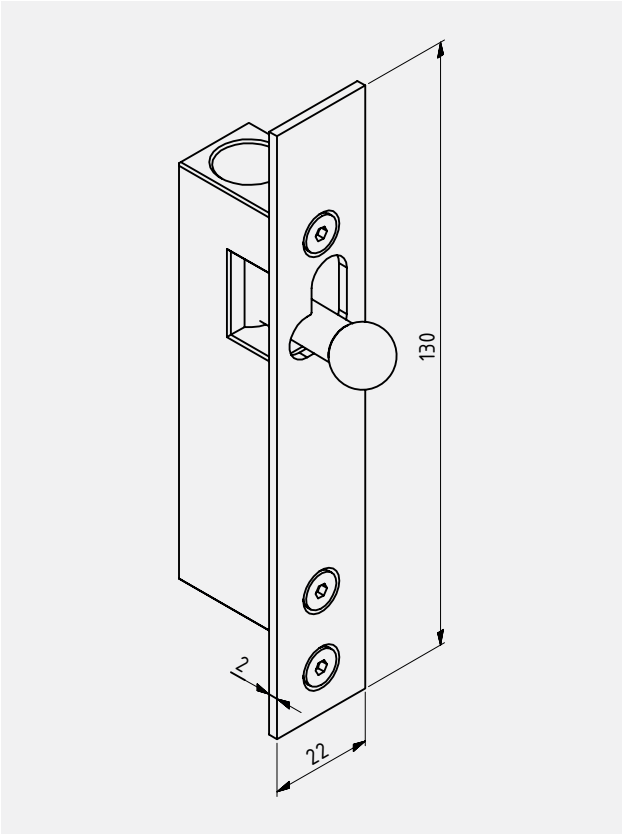

SHELL-TYPE HANDLE

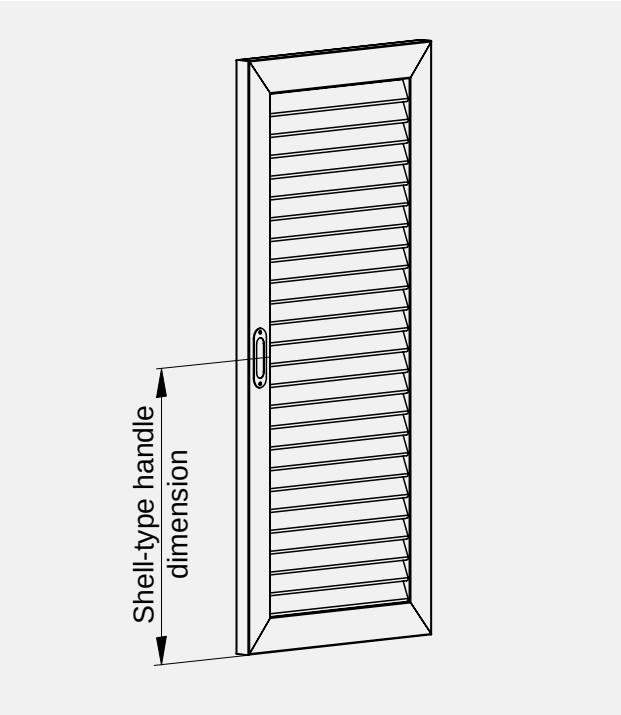

Pantograph shutter

LIMIT DIMENSIONS	120
INSTALLATION SITUATIONS AT TOP	124
INSTALLATION SITUATIONS AT BOTTOM	124
RUNNER RAIL	125
GUIDE RAILS	125
SECTIONS/DETAILS: INSTALLATION SITUATIONS AT TOP	126
SECTIONS/DETAILS: INSTALLATION SITUATIONS AT BOTTOM	128
END STOP DIAGRAMS	129
FRIEZE	129

LIMIT DIMENSIONS

Fixed slats

Model	Illustration	Frame profile	Slat profile
A		71 x 33	50 x 10, with 2 reinforcement bars
A Slim		40 x 33	
T		71 x 33	50 x 18, with reinforcement bars
R		71 x 33	60 x 6, with 2 reinforcement bars
H Alu		55 x 45	35 x 15 60 x 15
H Alu Slim		42 x 31	
H Wood		55 x 45	60 x 15, Siberian larch, untreated
H Wood Slim		42 x 31	

Definitions of dimensions 152

V1.2.0 | 20150901

Width min. (bff)	Width max. (bff)	Height min. (hff)	Height max. (hff)	Surface max. [m²]
		330		
200				
		280		
		330		
	550		3000	1.65
250		250		

bff: Finished sash width

hff: Finished sash height

Fillings

Model	Illustration	Frame profile	Filling
S		SYS 70x30	2 mm aluminum sheet
S Slim		40x31	
SL		SYS 70x30	2 mm aluminum sheet, perforated Standard perforations: Q 20x20, Q 35x35, RU 20 and RU 30 mm Distance between hole edges: ≥ 20 mm
SL Slim		40x31	
Sentum Slim	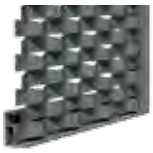	42x31	2 mm aluminum expanded metal Mesh according to choice (optional)
Platina		71x33	8 mm Fundermax Uni-Decor plate
Platina Slim		42x31	

Definitions of dimensions 152

V1.2.0 | 20150901

Width min. (bff)	Width max. (bff)	Height min. (hff)	Height max. (hff)	Surface max. [m²]
250	550	250	3000	1.65

bff: Finished sash width

hff: Finished sash height

INSTALLATION SITUATIONS AT TOP

Vertical section: Ceiling installation (DM)

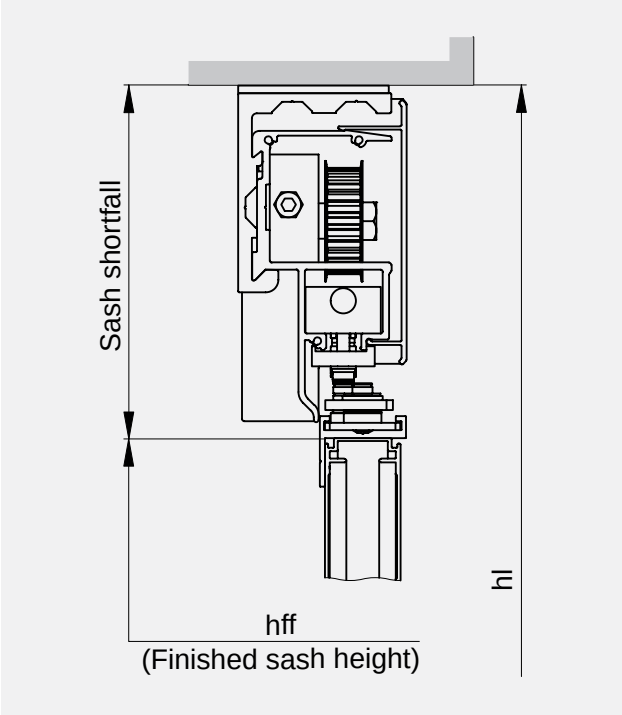

Vertical section: Facade installation

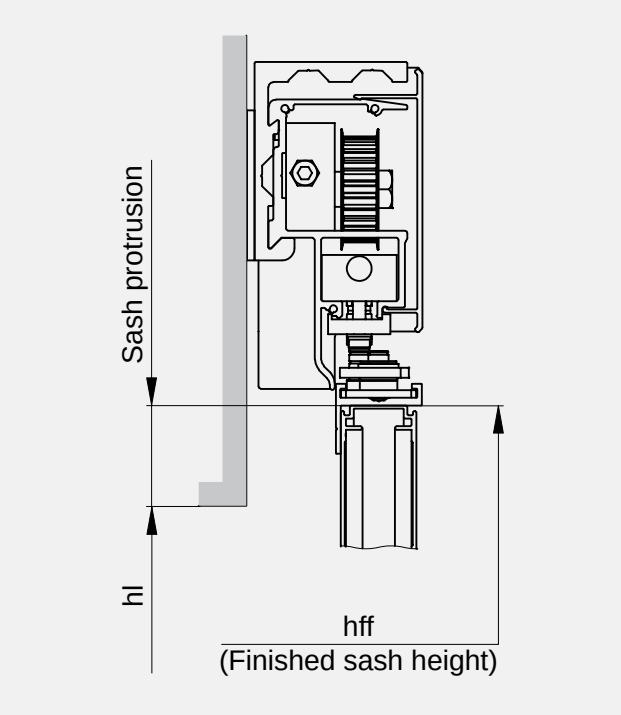

INSTALLATION SITUATIONS AT BOTTOM

Vertical section: Bottom installation

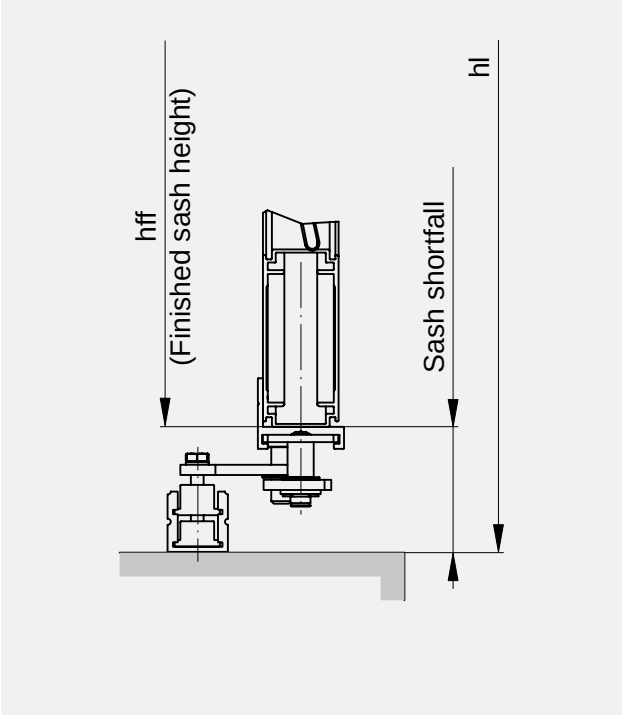

Vertical section: Facade installation

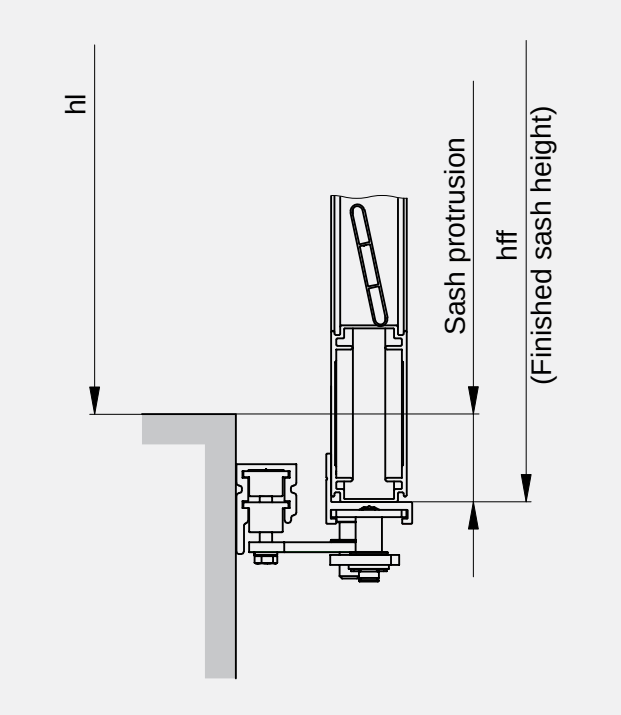

Sections / Details 126 / 128

V1.2.0 | 20150901

RUNNER RAIL

Type G

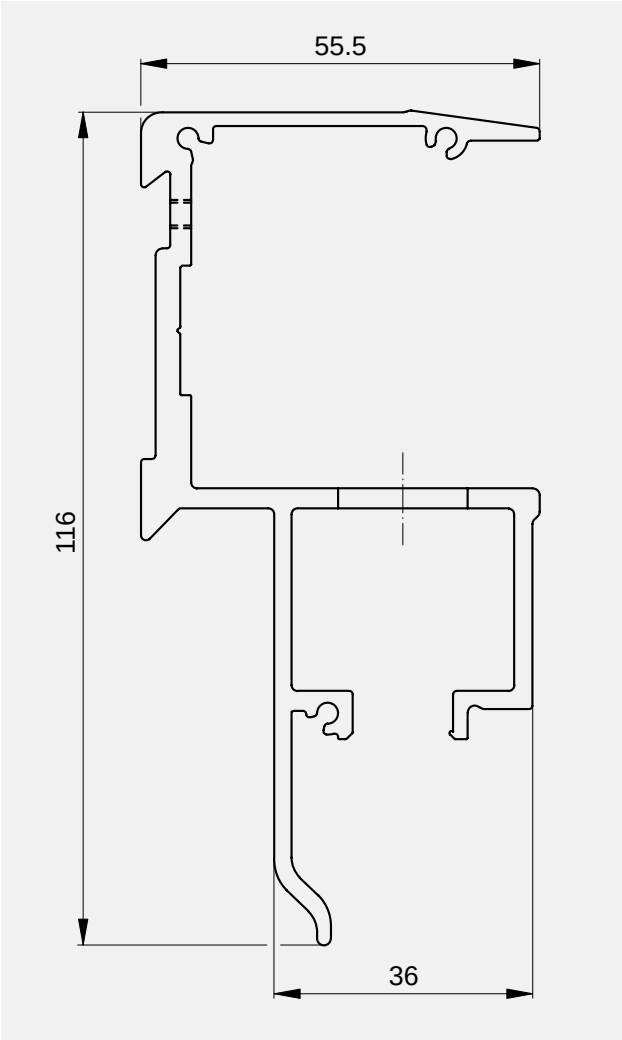

GUIDE RAILS

Type H | Bottom installation

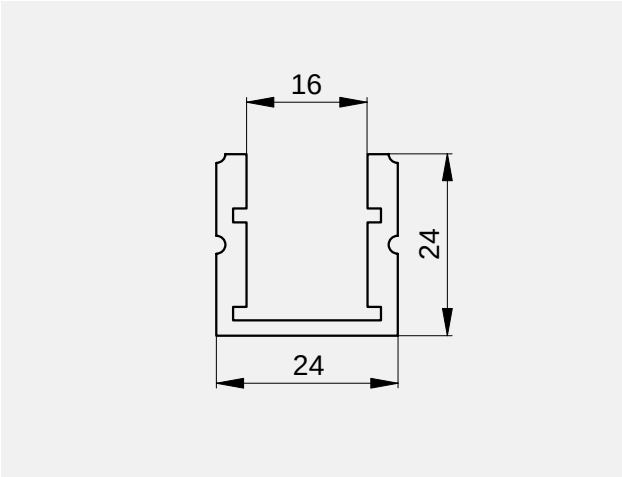

Type H | Facade installation

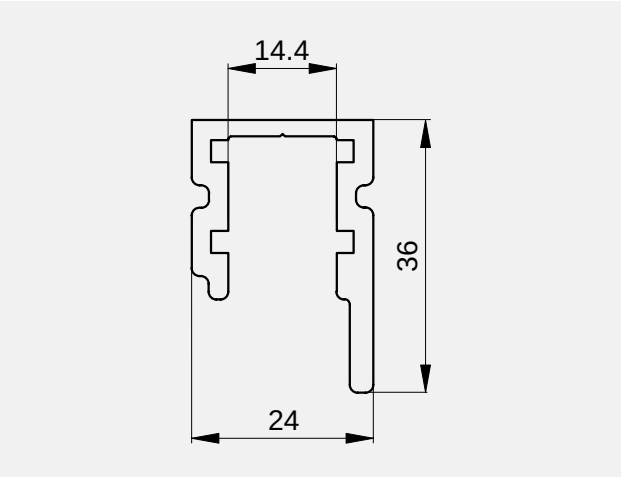

SECTIONS / DETAILS: INSTALLATION SITUATIONS AT TOP

Vertical section: Ceiling installation (DM)

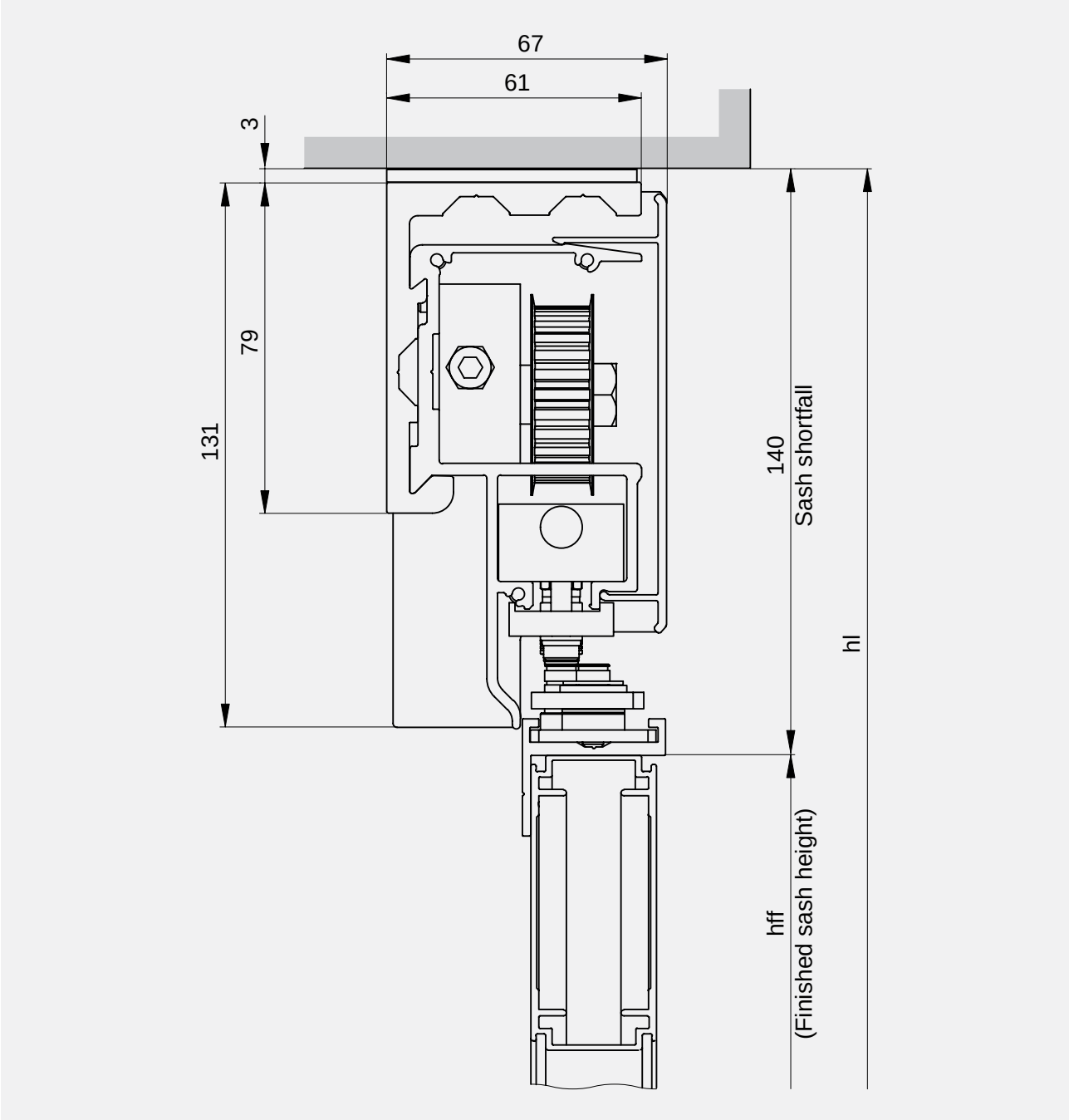

Vertical section: Facade installation

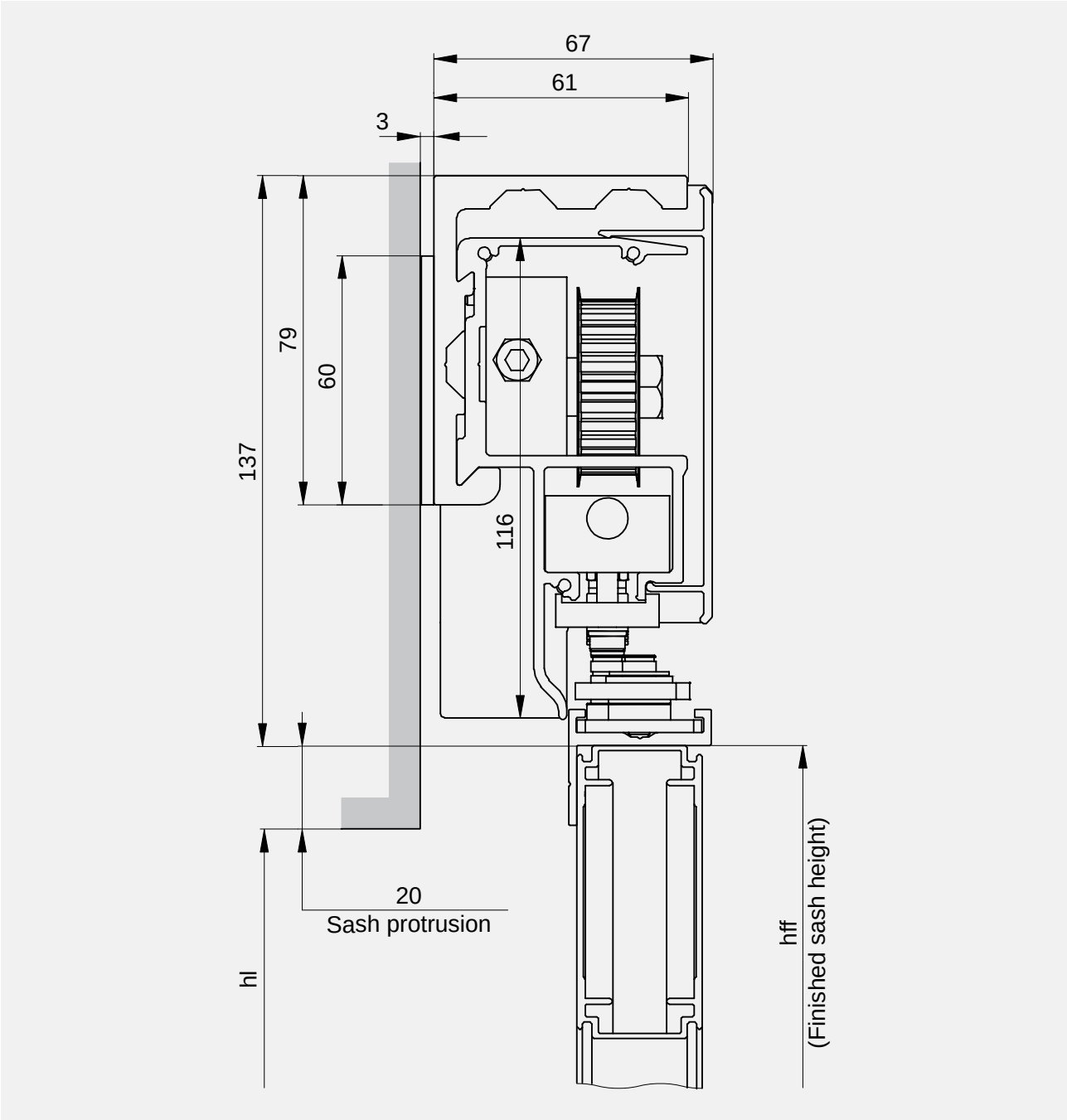

SECTIONS / DETAILS: INSTALLATION SITUATIONS AT BOTTOM

Vertical section: Bottom installation

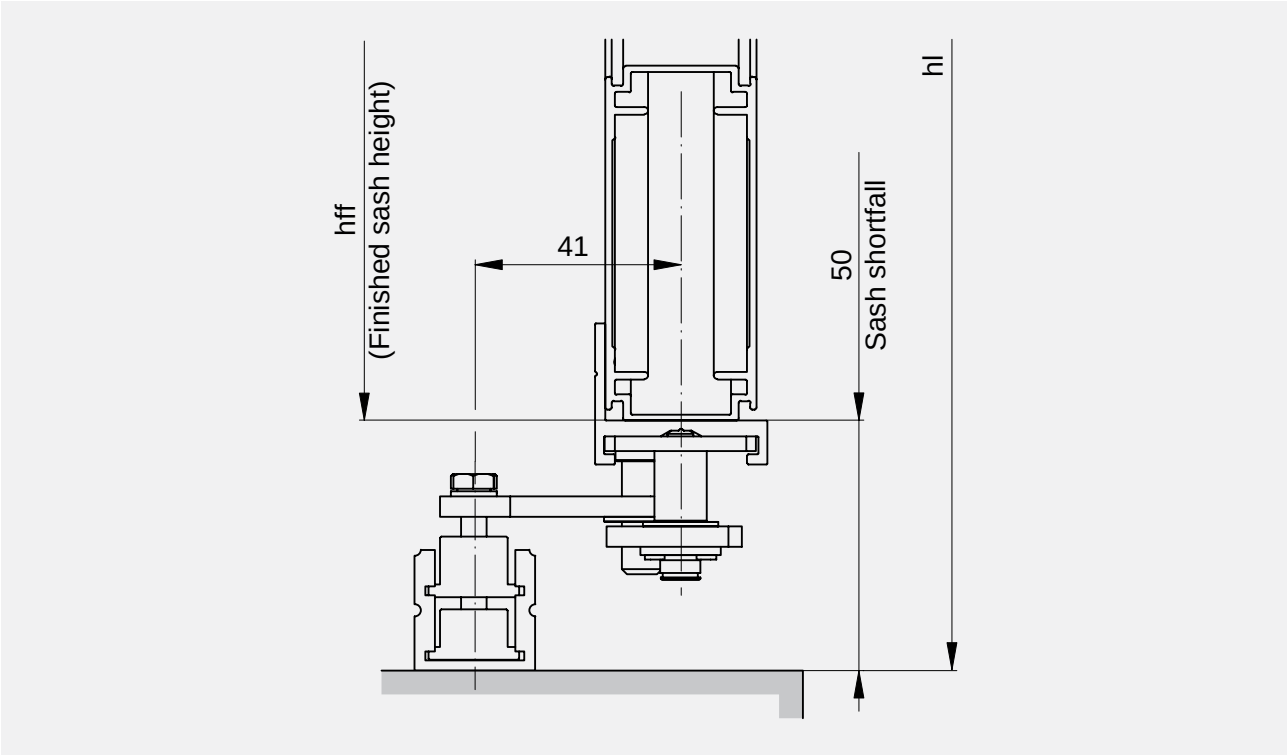

Vertical section: Facade installation

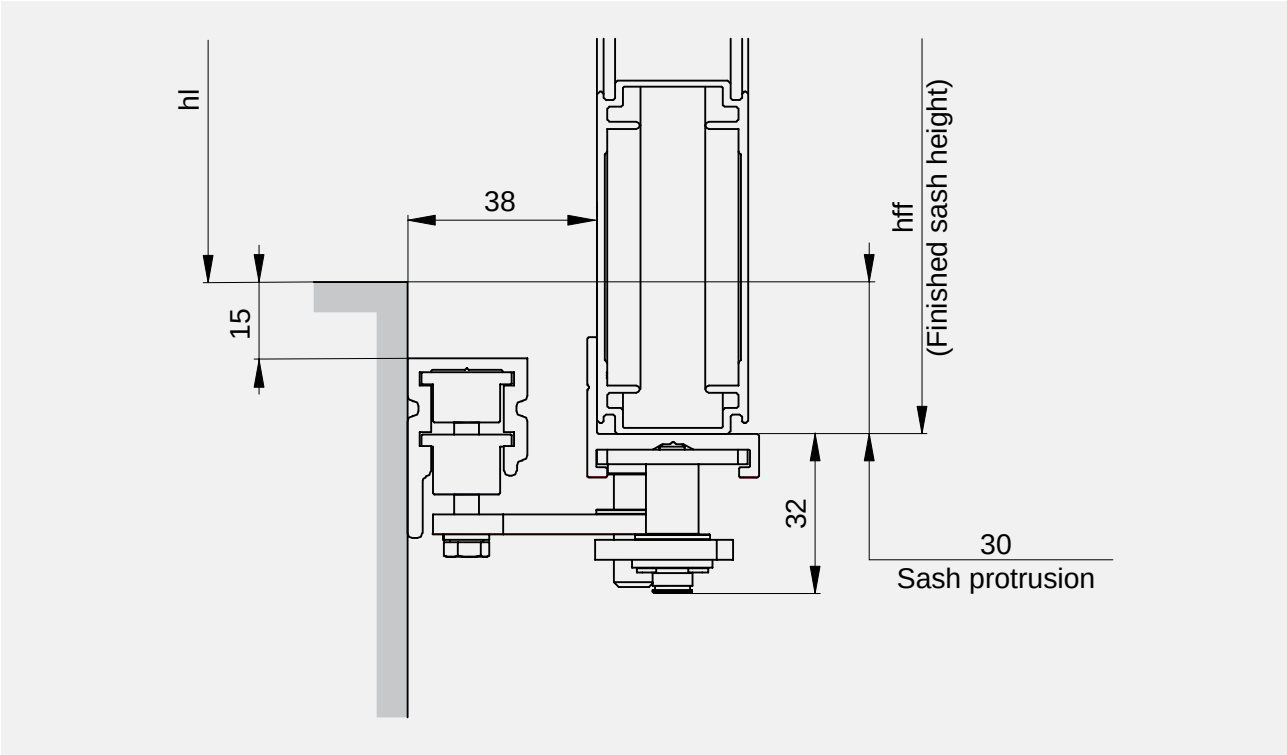

END STOP DIAGRAMS

Scheme 4

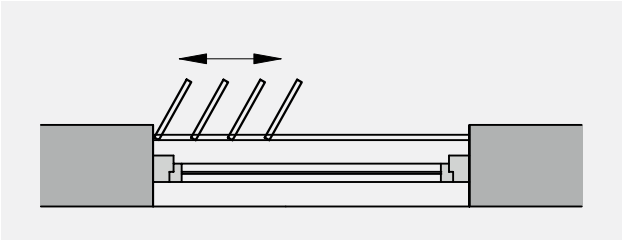

Scheme 4L

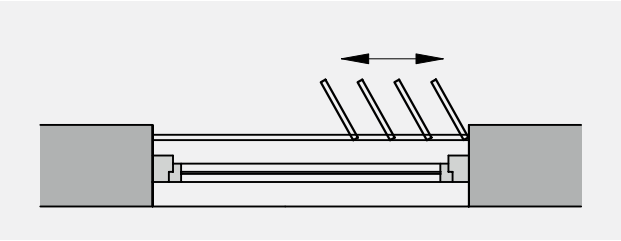

Scheme 4R

Schematic diagram of the pantograph shutters for 2 – 8 sashs

Limit dimensions 120

FRIEZE

Horizontal frieze

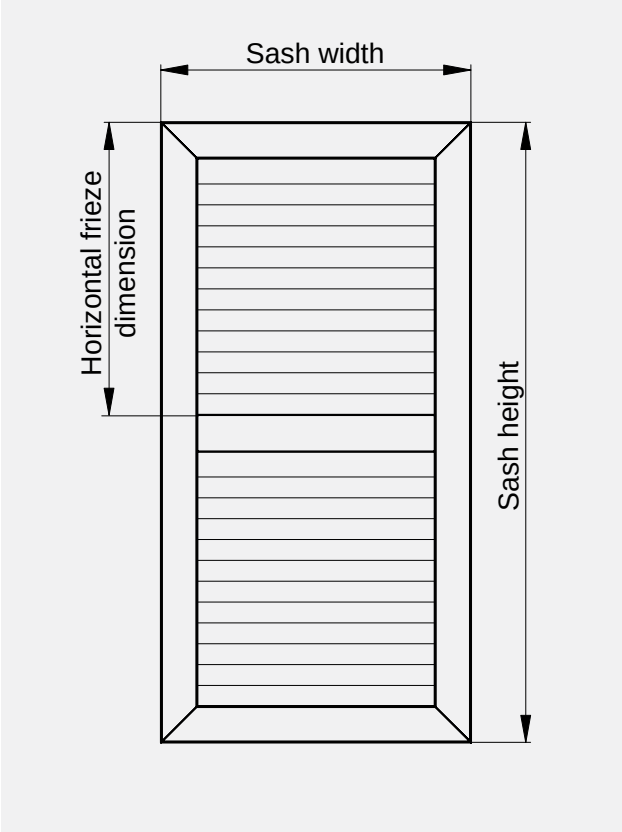

Horizontal frieze dimension min.
300

Sliding bi-fold shutter

LIMIT DIMENSIONS	132
INSTALLATION SITUATIONS AT TOP	136
INSTALLATION SITUATIONS AT BOTTOM	137
RUNNER RAILS	138
GUIDE RAILS	139
SECTIONS/DETAILS: INSTALLATION SITUATIONS AT TOP	140
SECTIONS/DETAILS: INSTALLATION SITUATIONS AT BOTTOM	143
END STOP DIAGRAMS	147
FRIEZE	148
PULL LATCHES	148

LIMIT DIMENSIONS

Fixed slats

Model	Illustration	Frame profile	Slat profile
A		71 x 33	50 x 10, with 2 reinforcement bars
A Slim		40 x 33	
T		71 x 33	50 x 18, with reinforcement bars
R		71 x 33	60 x 6, with 2 reinforcement bars
H Alu Slim		42 x 31	60 x 15 35 x 15
H Wood Slim		42 x 31	60 x 15, Siberian larch, untreated

Clothings

Model	Illustration	Frame profile	Fabric Soltis
Soltis		71 x 33	92 86

Definitions of dimensions 152

V1.2.0 | 20150901

Width min. (bff)	Width max. (bff)	Height min. (hff)	Height max. (hff)	Surface max. [m²]
		330		
200				
		280		
	600		3000	1.8
		330		
250		250		

Width min. (bff)	Width max. (bff)	Height min. (hff)	Height max. (hff)	Surface max. [m²]
400	600	400	3000	1.8

bff: Finished sash width

hff: Finished sash height

Fillings

Model	Illustration	Frame profile	Filling
S		SYS 70x30	2 mm aluminum sheet
S Slim		40x31	
SL		SYS 70x30	2 mm aluminum sheet, perforated Standard perforations: Q 20x20, Q 35x35, RU 20 and RU 30 mm Distance between hole edges: ≥ 20 mm
SL Slim		40x31	
Sentum Slim	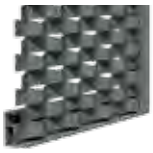	42x31	2 mm aluminum expanded metal Mesh according to choice (optional)
Platina Slim		42x31	8 mm Fundermax Uni-Decor plate

Definitions of dimensions 152

Width min. (bff)	Width max. (bff)	Height min. (hff)	Height max. (hff)	Surface max. [m²]
250	550	250	3000	1.65

bff: Finished sash width

hff: Finished sash height

INSTALLATION SITUATIONS AT TOP

Vertical section: Ceiling installation (DM)

Type FSR 1

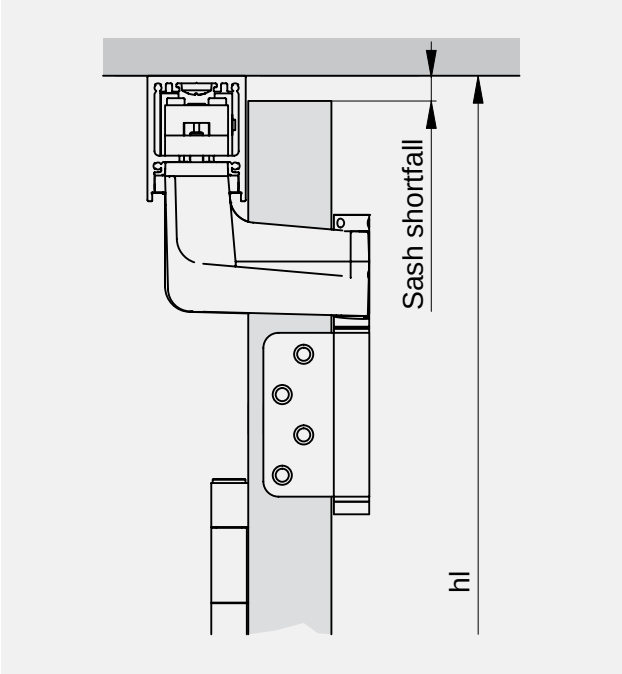

Type FSH 1 / FSH 2

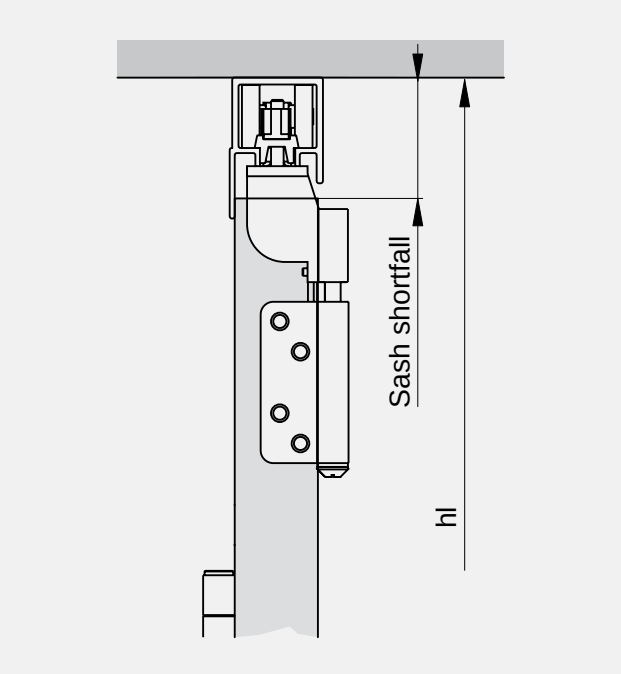

Vertical sections: Facade installation

Type FSR 2

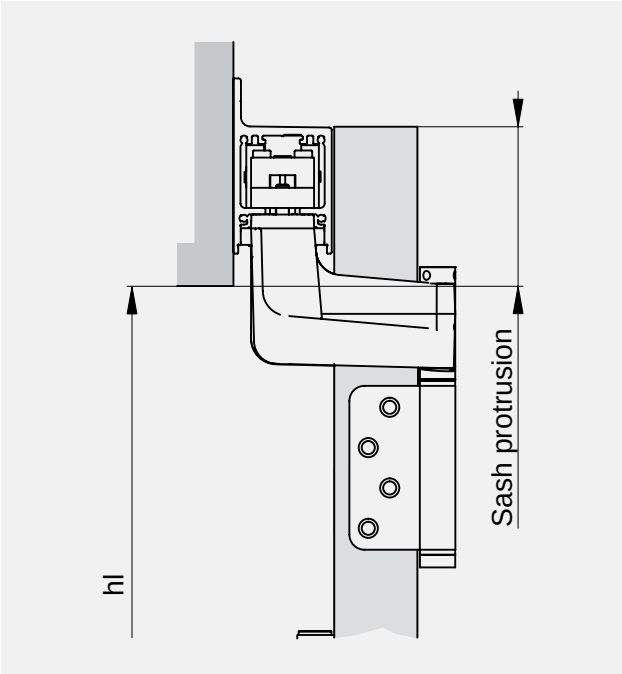

Sections / Details 140

V1.2.0 | 20150901

INSTALLATION SITUATIONS AT BOTTOM

Vertical sections: Bottom installation

Type FSR 1

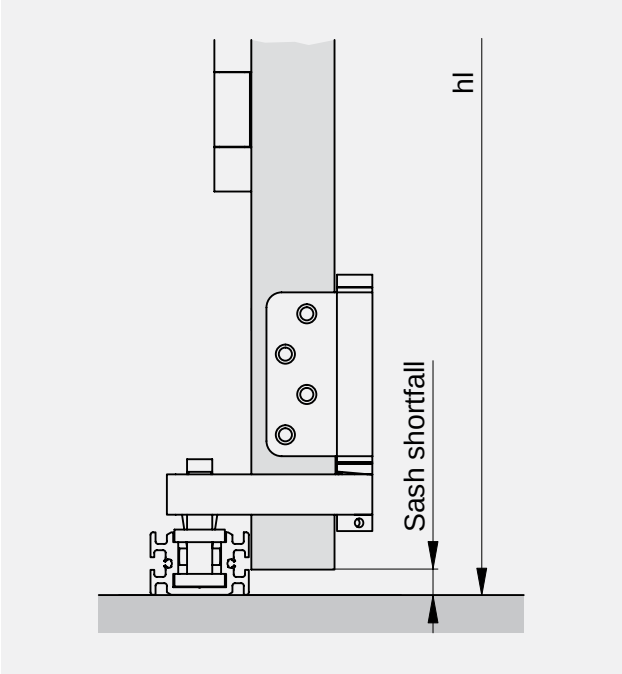

Type FSH 1

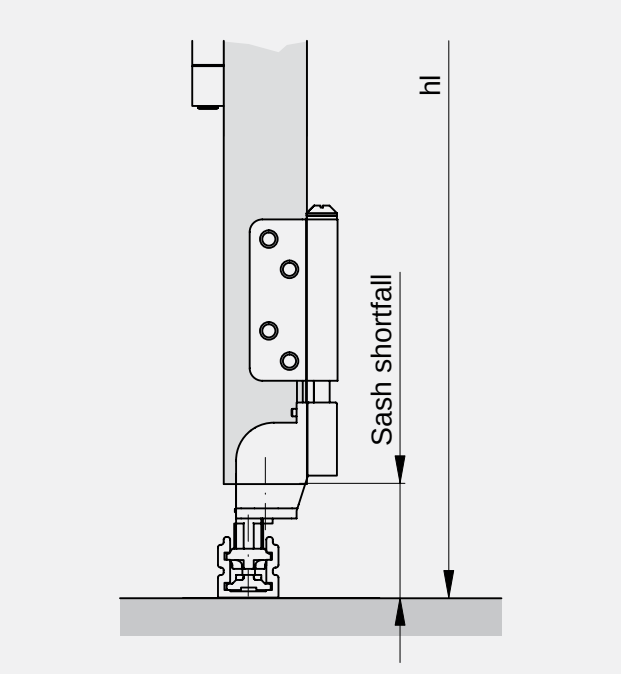

Vertical sections: Facade installation

Type FSR 2

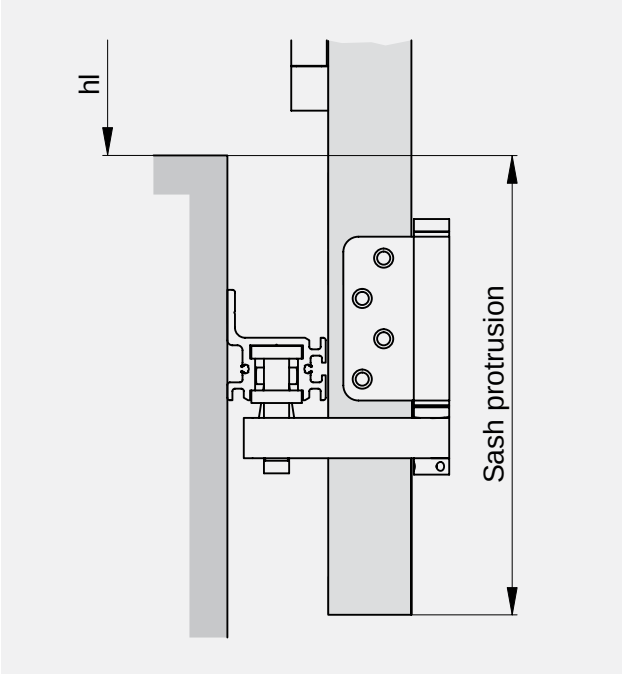

Type FSH 2

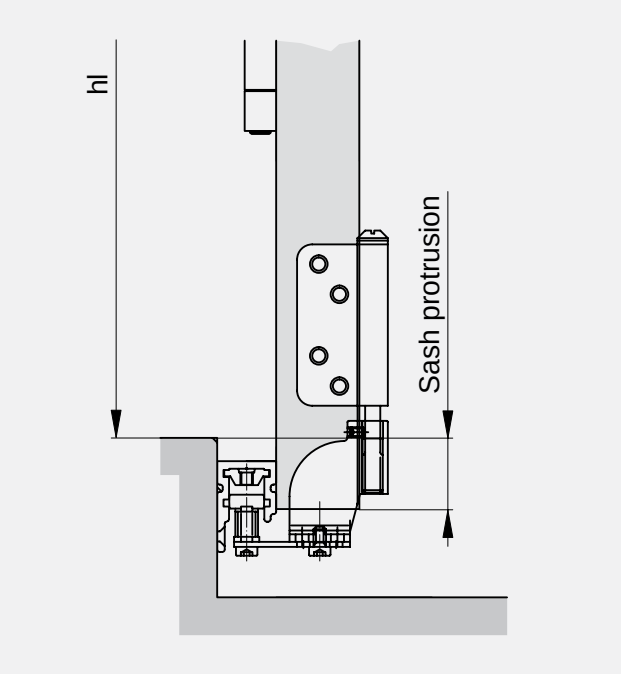

RUNNER RAILS

Type G | Ceiling installation

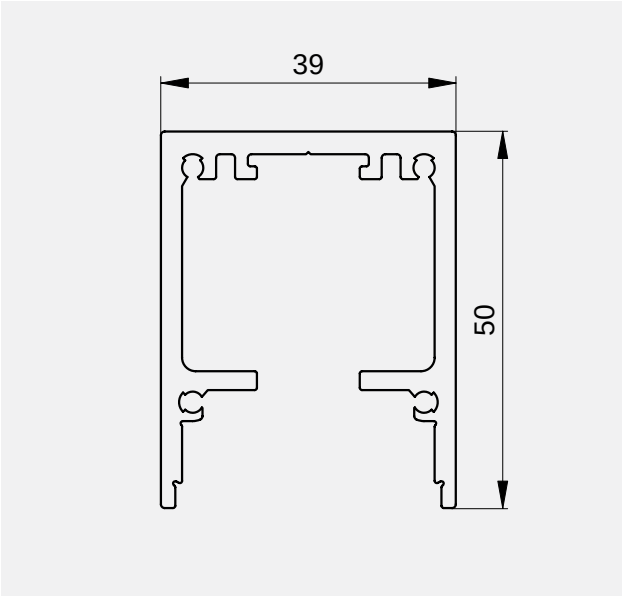

Type H | Ceiling installation

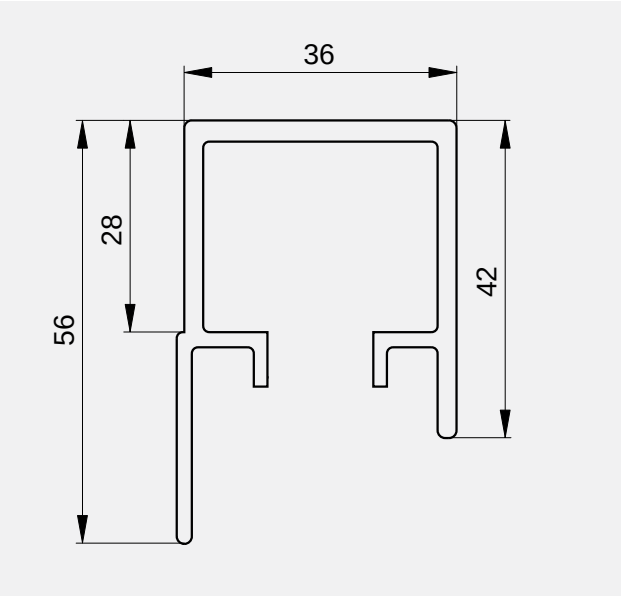

Type G | Facade installation

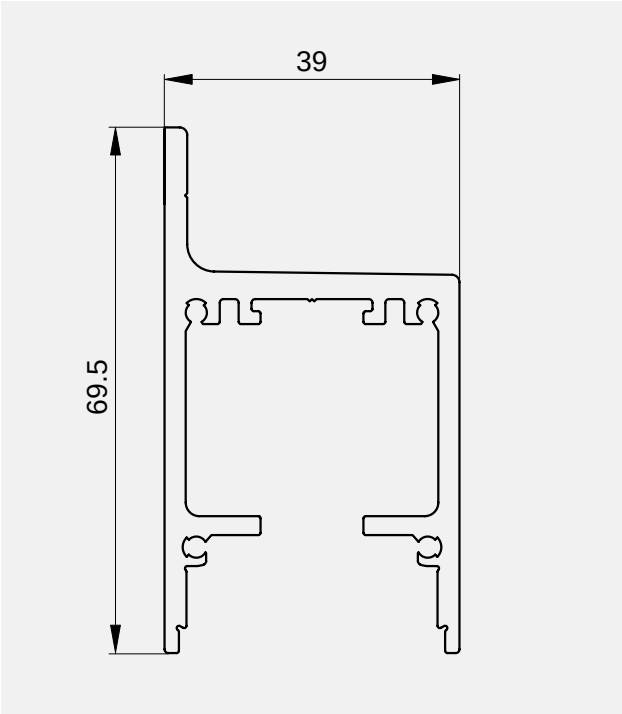

GUIDE RAILS

Type G | Bottom installation

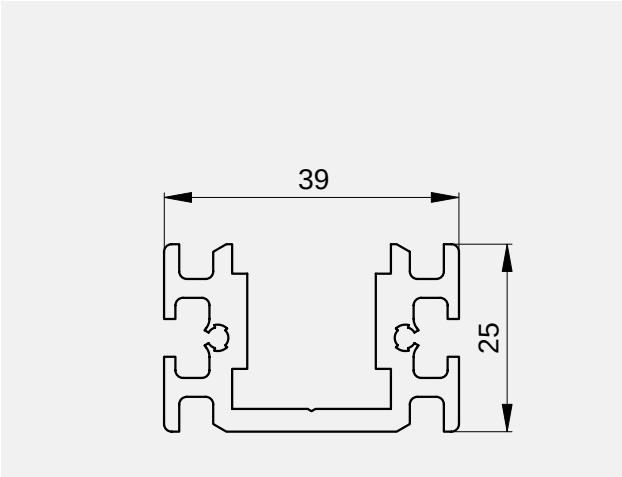

Type H | Bottom installation

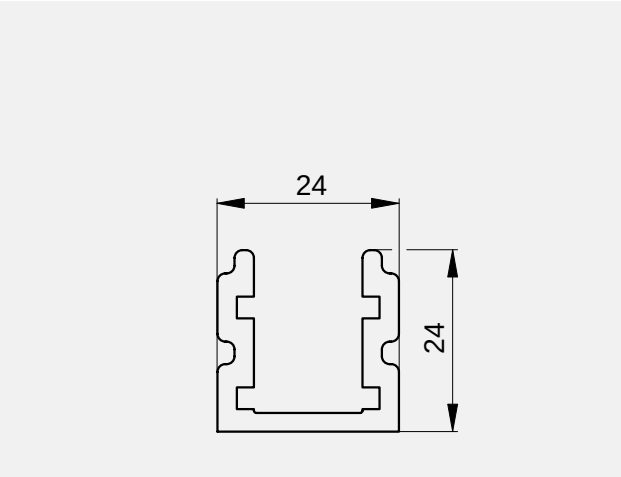

Type G | Facade installation

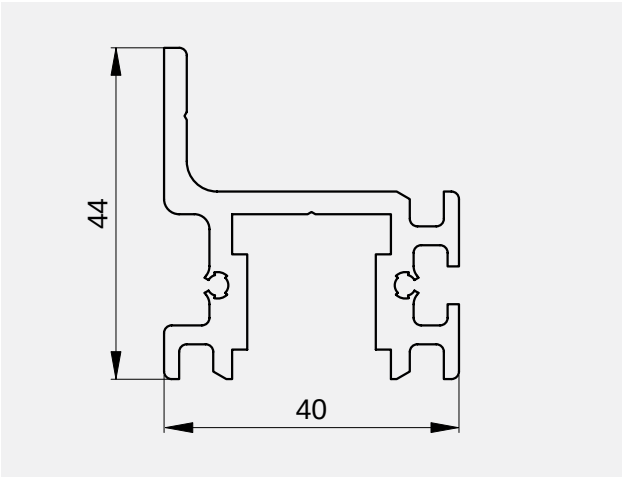

Type H | Facade installation

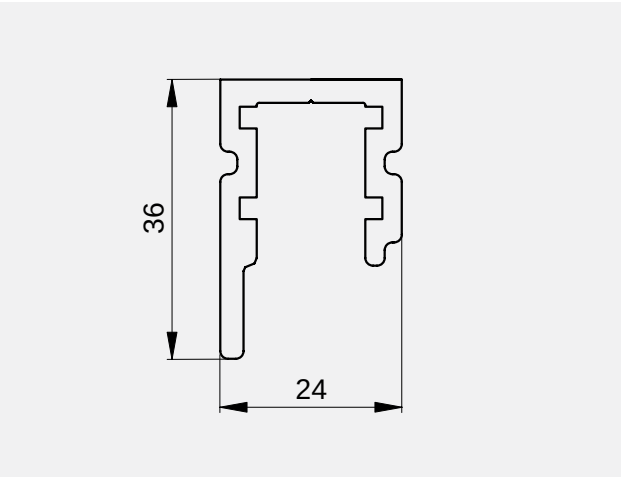

SECTIONS / DETAILS: INSTALLATION SITUATIONS AT TOP

Vertical section: Ceiling installation (DM)

Type FSR 1

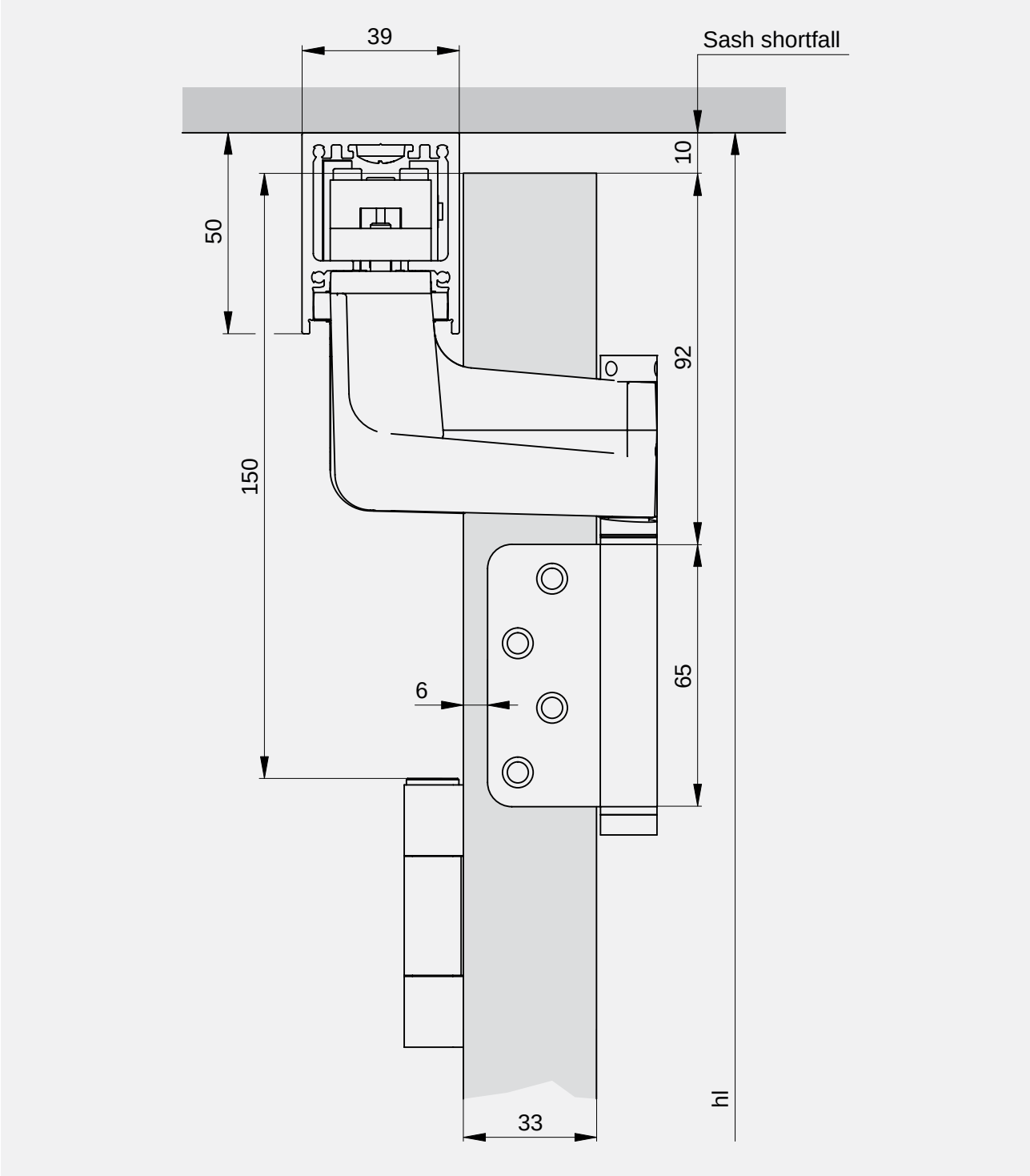

Type FSH 1 / FSH 2

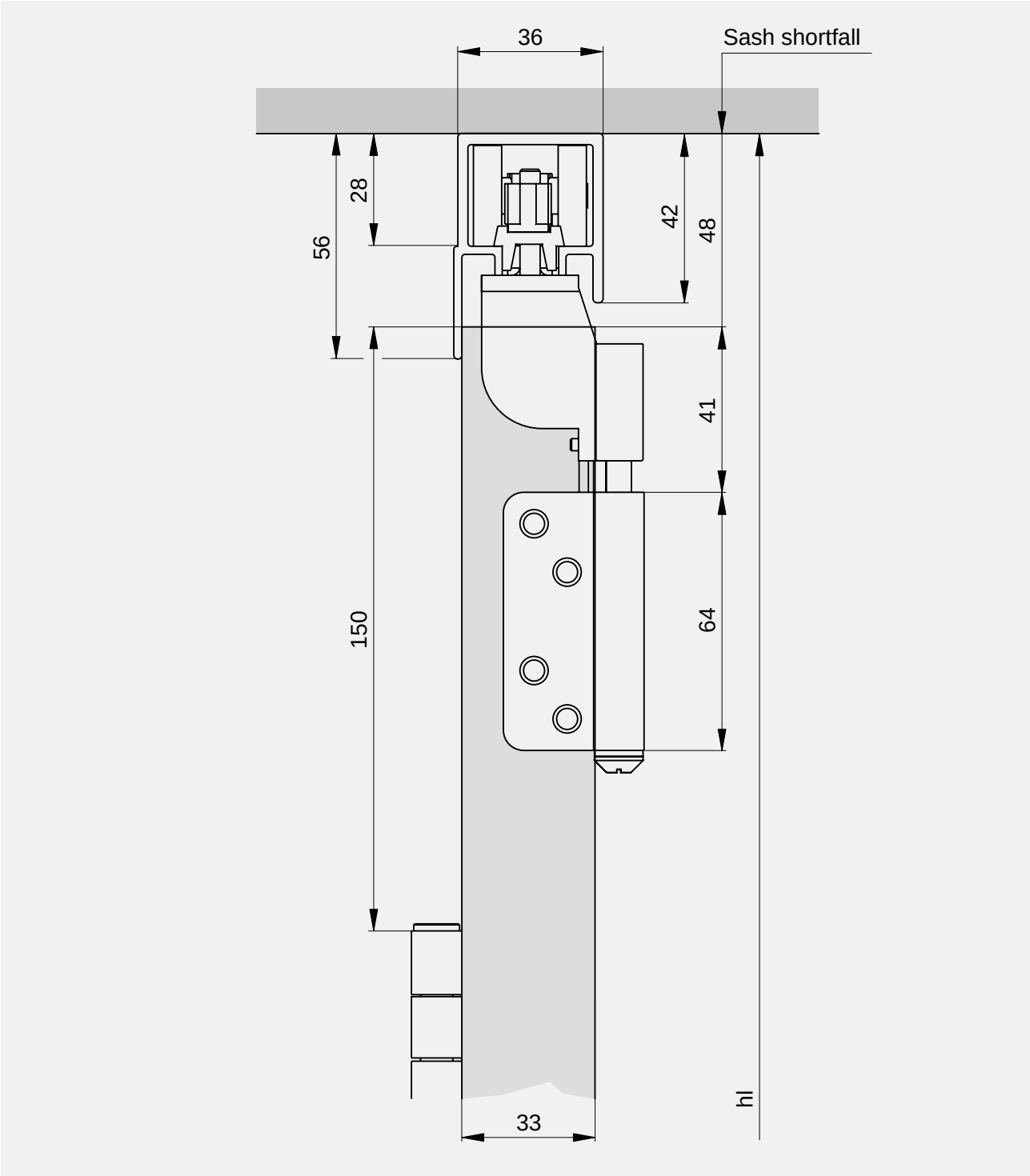

Vertical sections: Facade installation

Type FSR 2

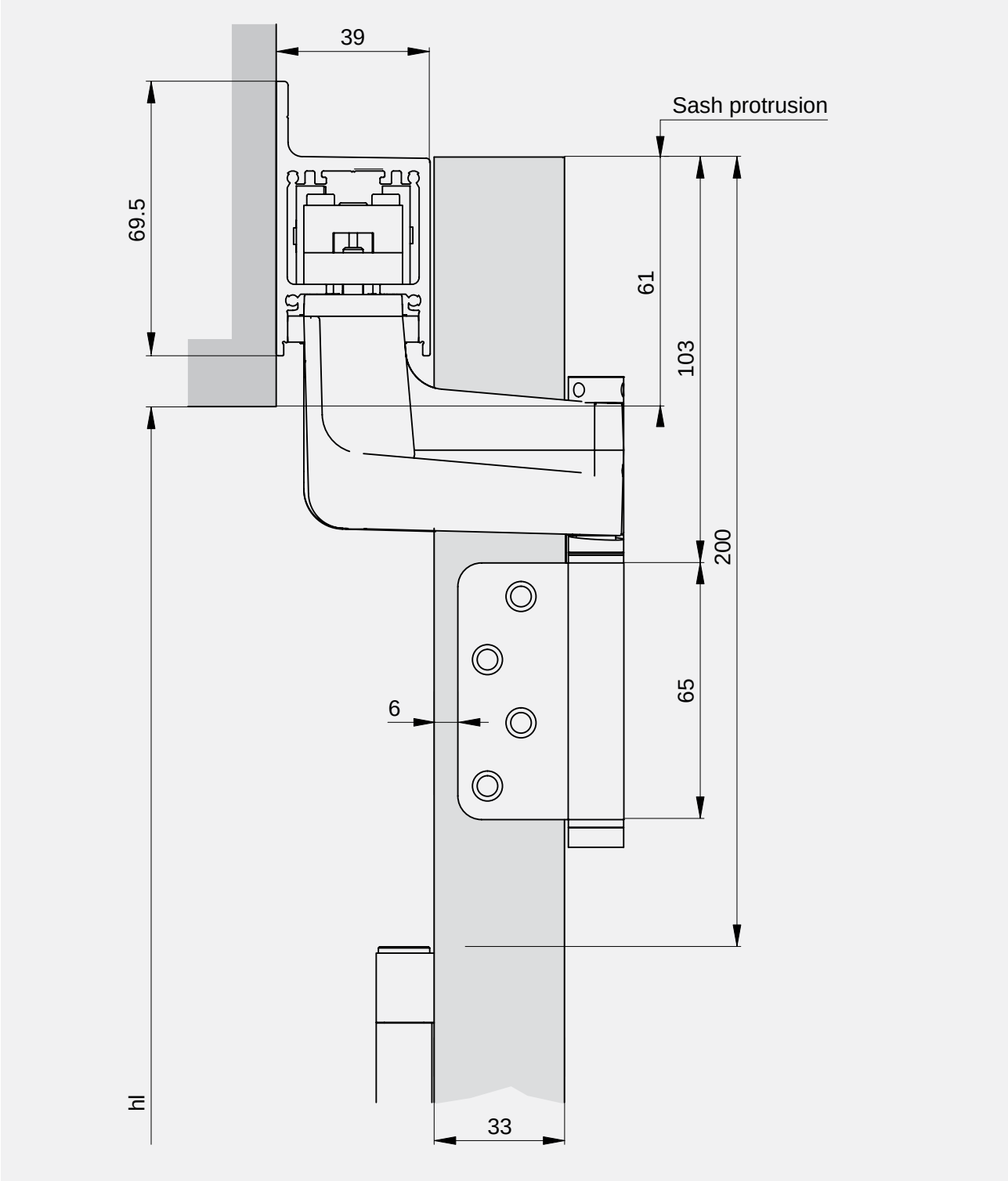

SECTIONS / DETAILS: INSTALLATION SITUATIONS AT BOTTOM

Vertical sections: Bottom installation

Type FSR 1

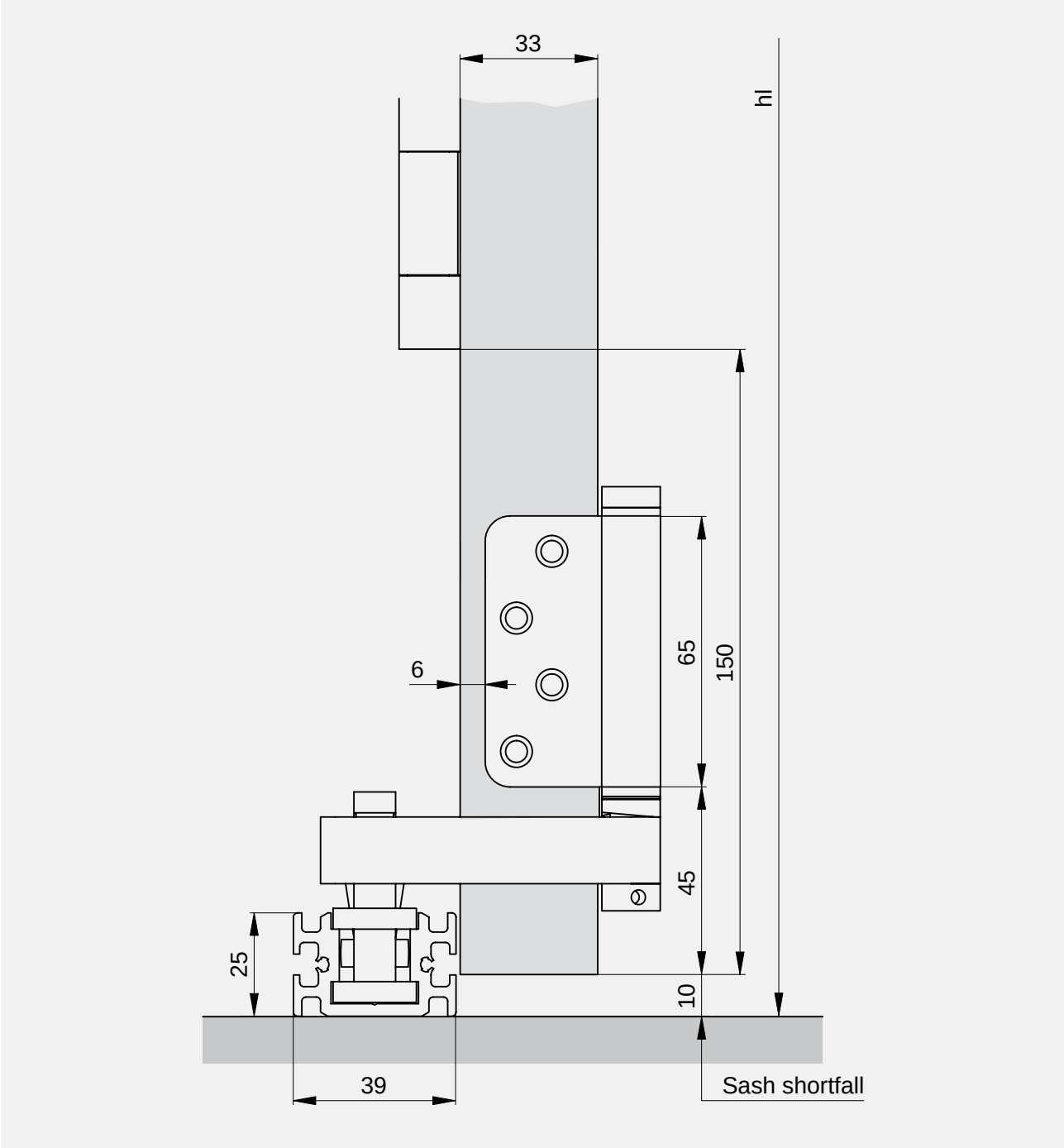

Type FSH 1

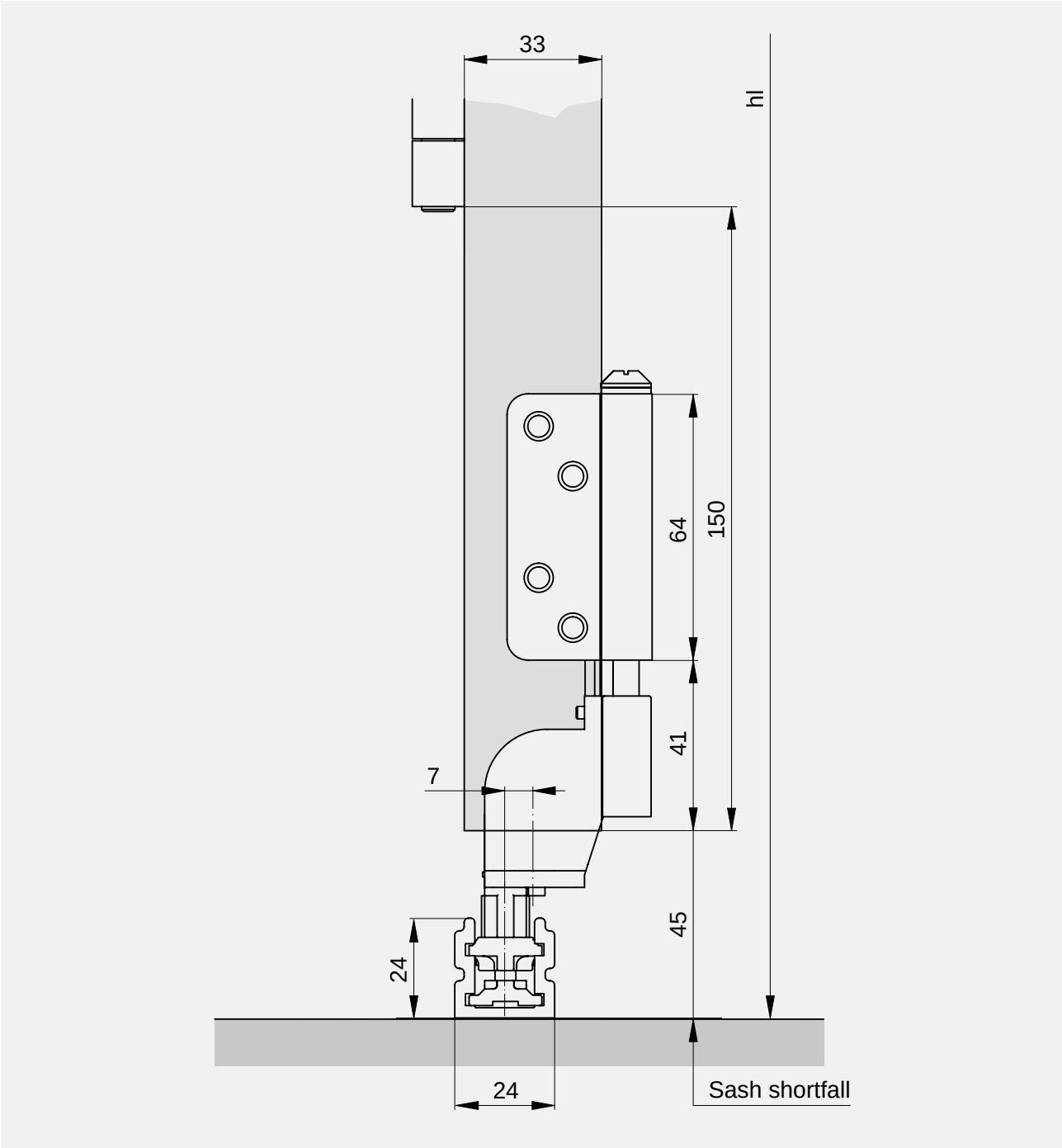

Vertical sections: Facade installation

Type FSR 2

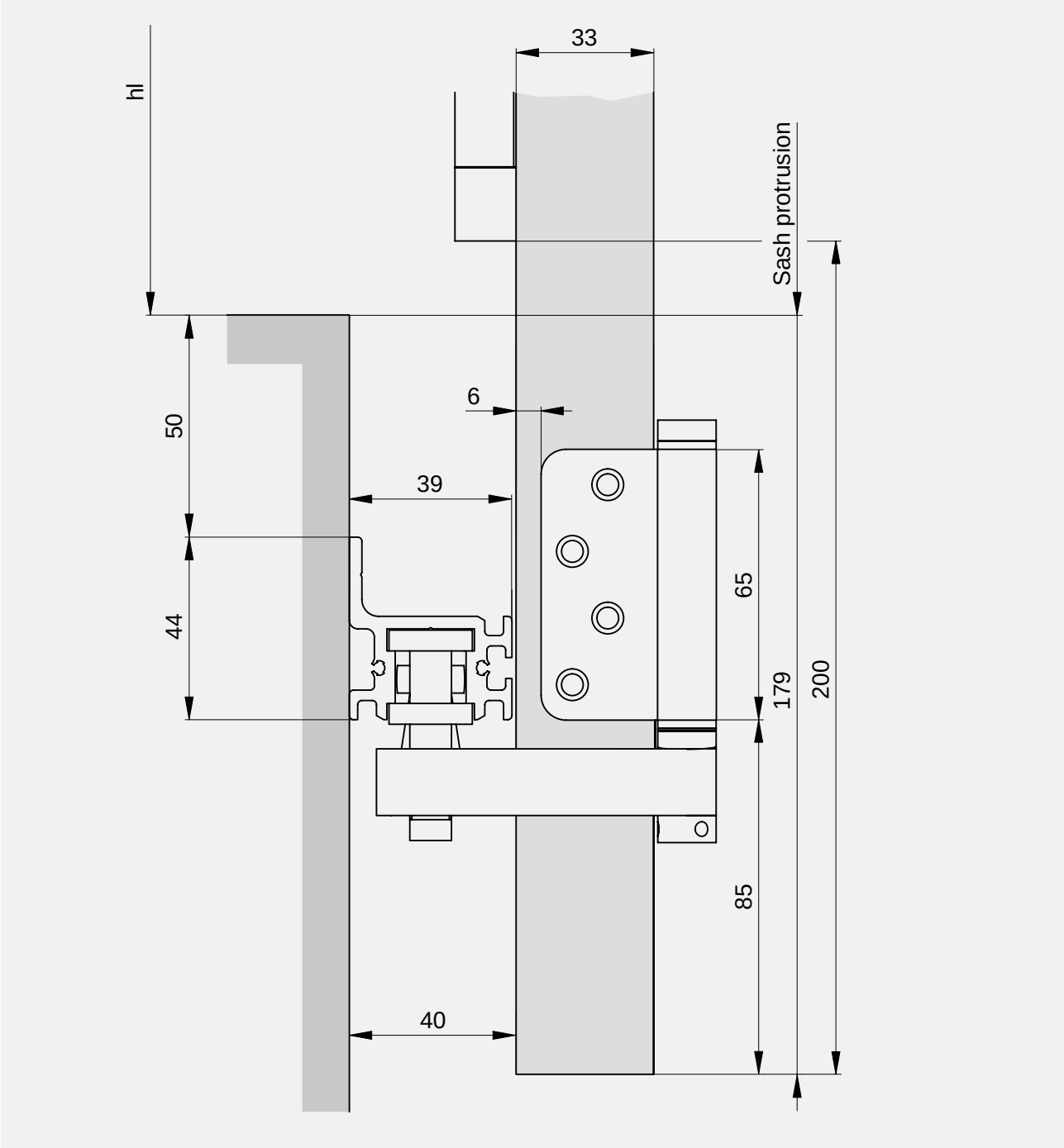

Type FSH 2

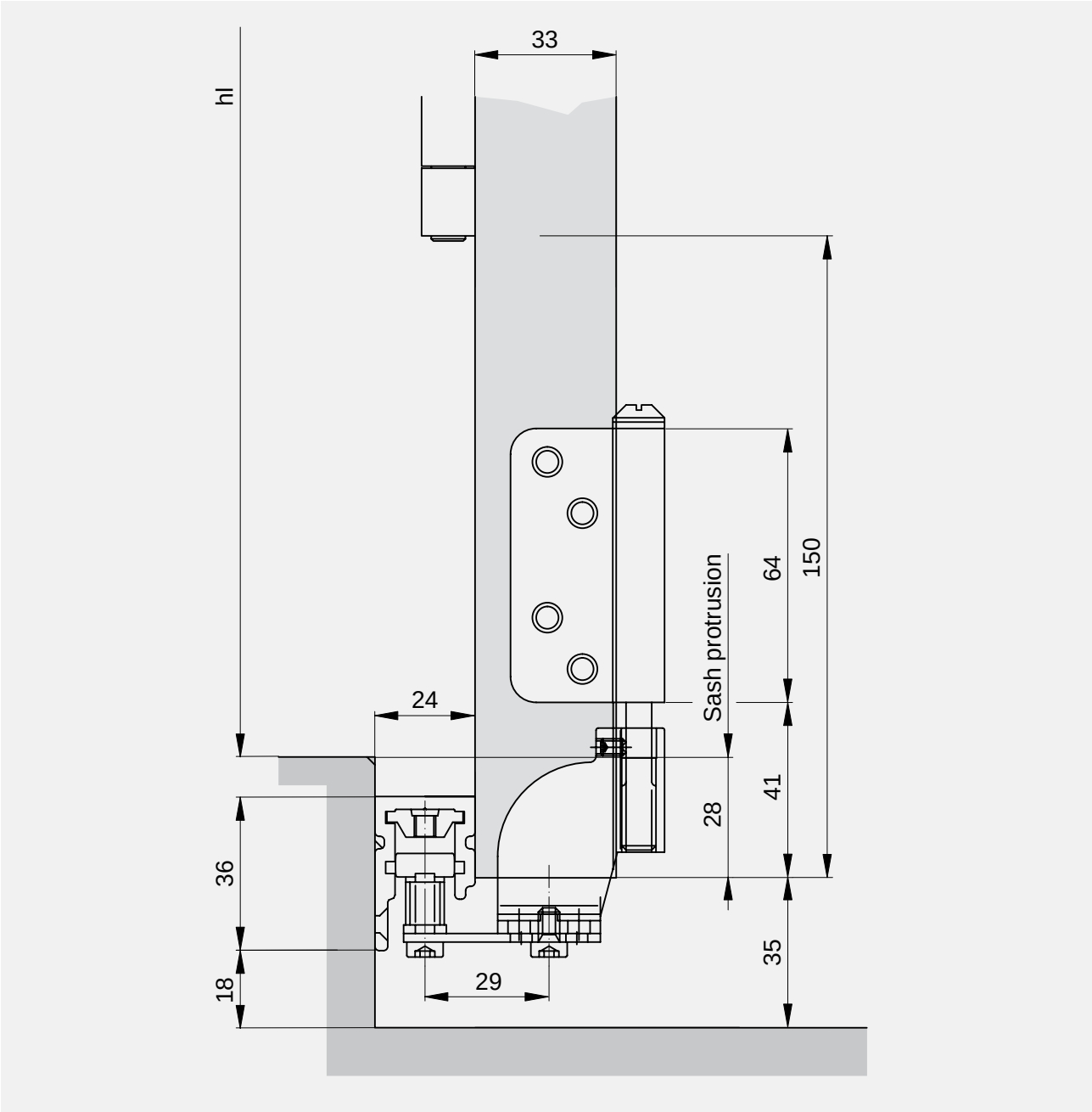

END STOP DIAGRAMS

Scheme 2

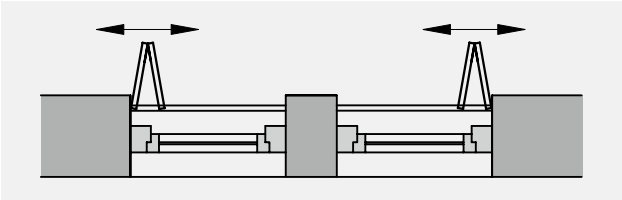

Scheme 2L | 2R

Scheme 4

Scheme 4

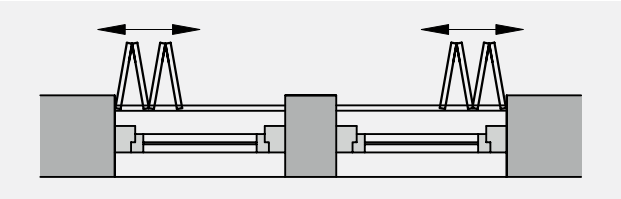

Scheme 4L | 4R

Scheme 6

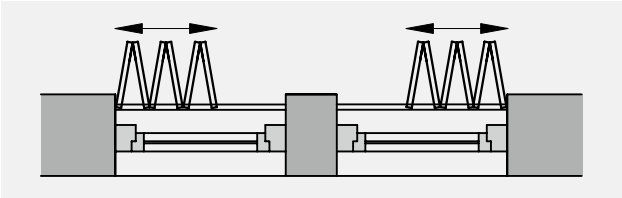

Scheme 6L | 6R

Scheme 8

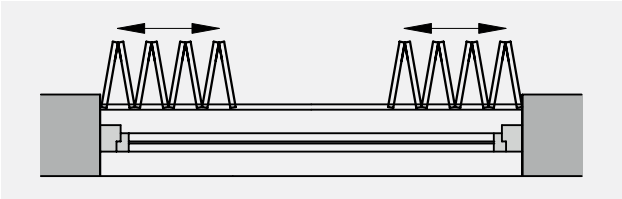

Scheme 8

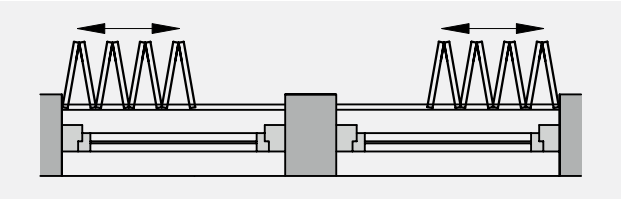

Scheme 8L | 8R

Limit dimensions 132

FRIEZE

Horizontal frieze

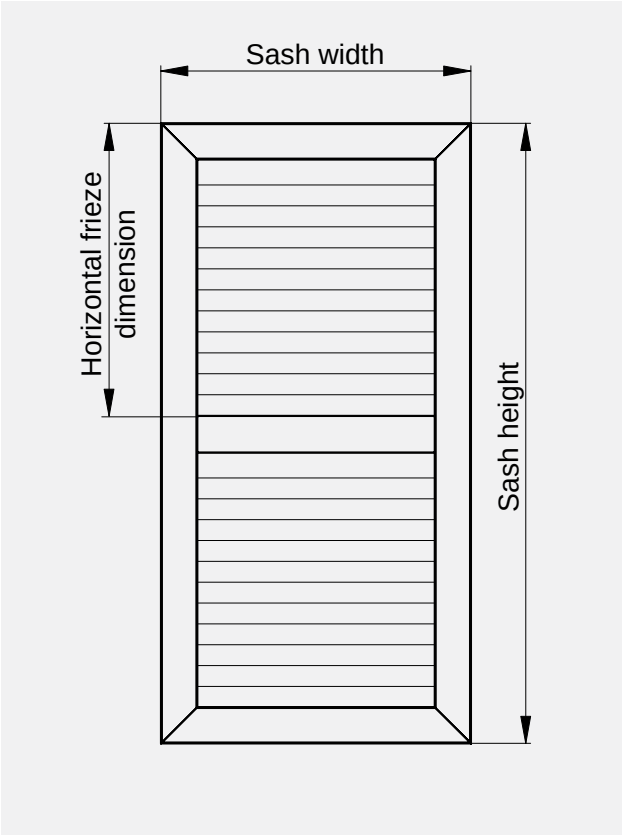

Horizontal frieze dimension min.
300

PULL LATCHES

Pull latch, round

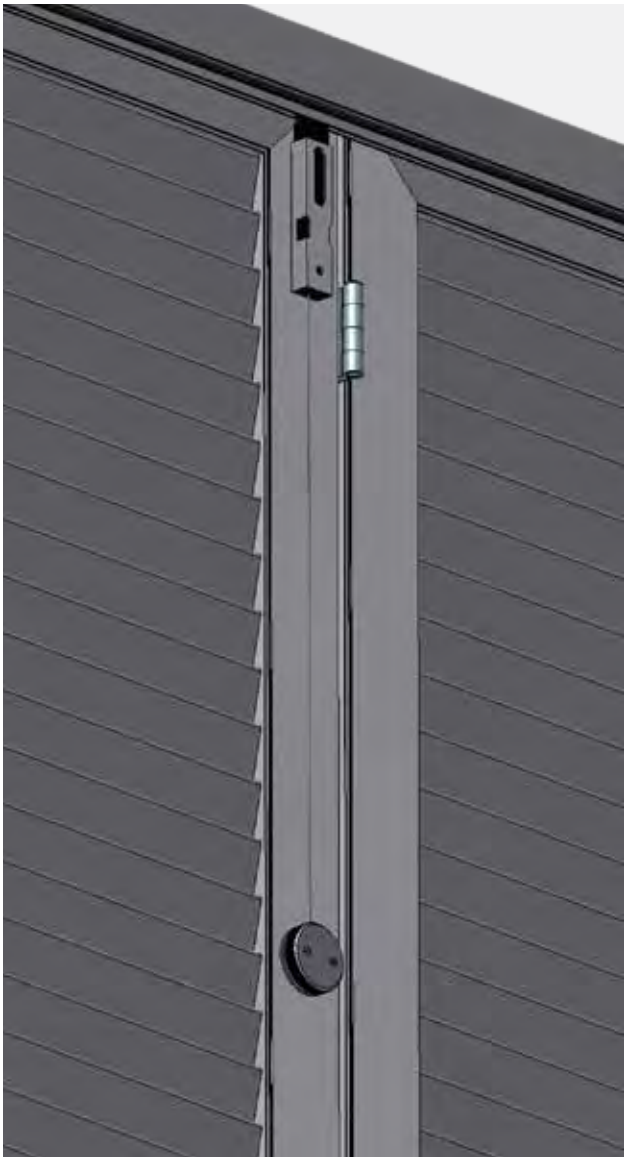

Planning

DEFINITIONS OF DIMENSIONS 152

DEFINITIONS OF DIMENSIONS

– Dimensions should always be viewed from **inside out**.