GRIESSER

Wing shutters

WING SHUTTER WITH WINDOW FRAME	7
WING SHUTTER WITH INSTALLATION FRAME	23
WING SHUTTER CONVENTIONAL	59
PLANNING	83

Wing shutter with window frame

LIMIT DIMENSIONS WINDOW	8
MOUNTING SITUATION	9
SASH TYPES	10
PRE-DRILLED HOLES	13
SECTIONS/DETAILS	14
END STOP DIAGRAMS	16
FRIEZE	18
RETENTION ELEMENTS	19
LOCKERS	21

V1.2.0 | 20150901

LIMIT DIMENSIONS WINDOW (SOFFIT HEADROOM SIZES)

Version	Width min. (B)	Width max. (B)	Height min. (Al)	Height max. (Al)	Surface max. [m²]
1 sash	300	1000	800	2500	2.5
2 sashs	600	2000			5
3 sashs	900	2500			6.25
4 sashs	1100	3000			7.5

Definitions of dimensions 84

MOUNTING SITUATION

Vertical section

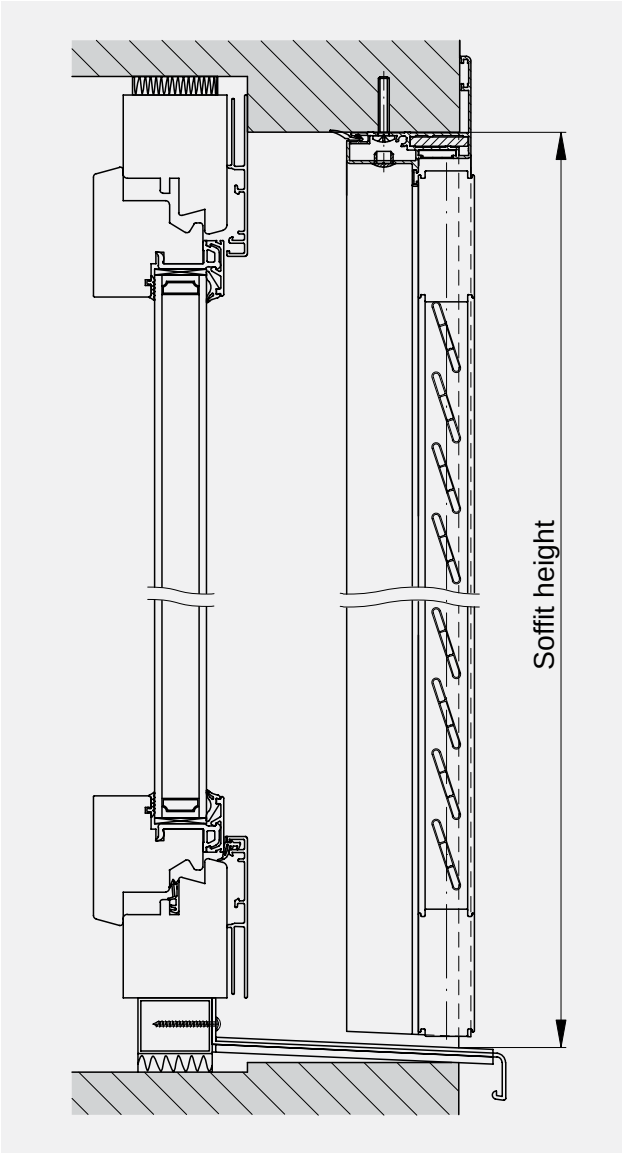

Horizontal section

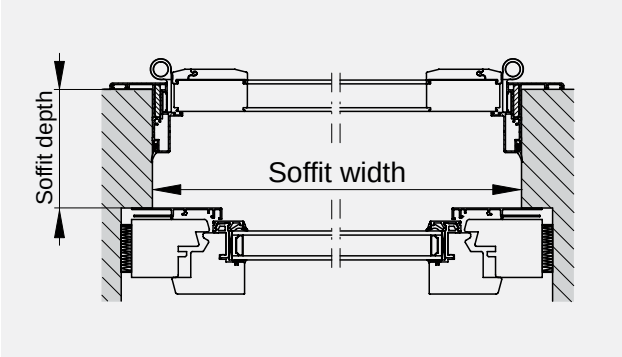

Sections / Details 14

SASH TYPES

Fixed slats

Model A

Model R

Model T

Model EZ

Movable slats

Model B

Model E

Fillings

Model C

Model CH

Model F

Model G ISO

PRE-DRILLED HOLES

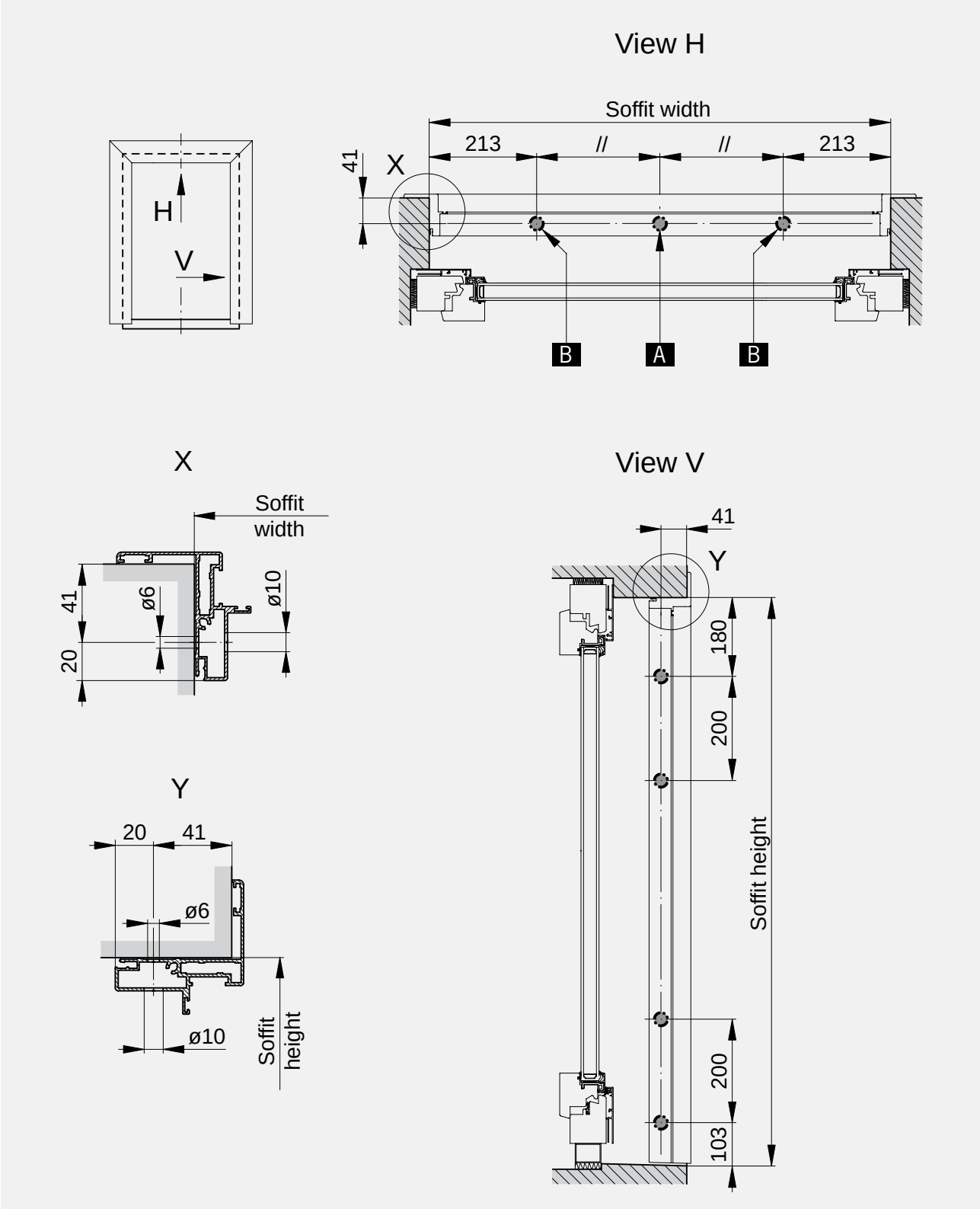

Soffit width	Holes
< 1800	A
1800–3000	A + B

SECTIONS / DETAILS

Horizontal section

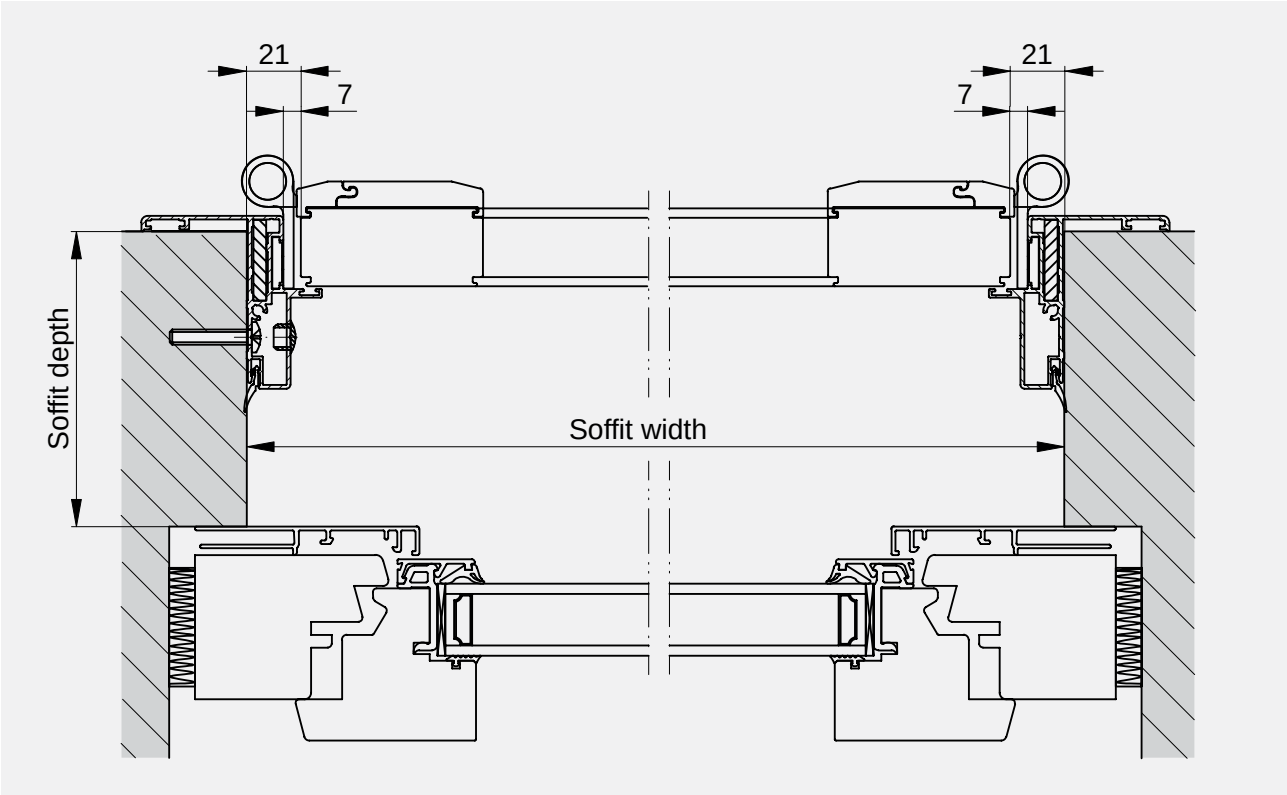

Detail: Horizontal section of window frame

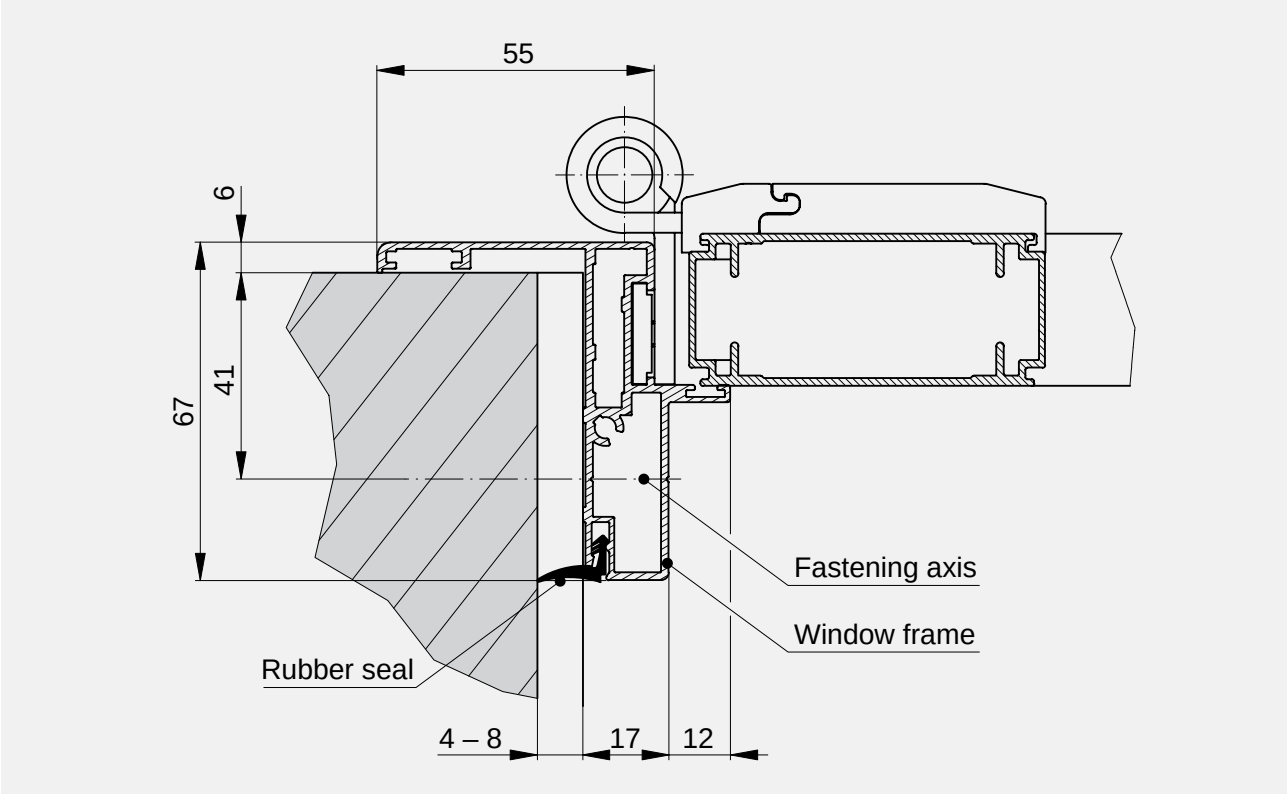

Detail for bottom: Window frame beveling

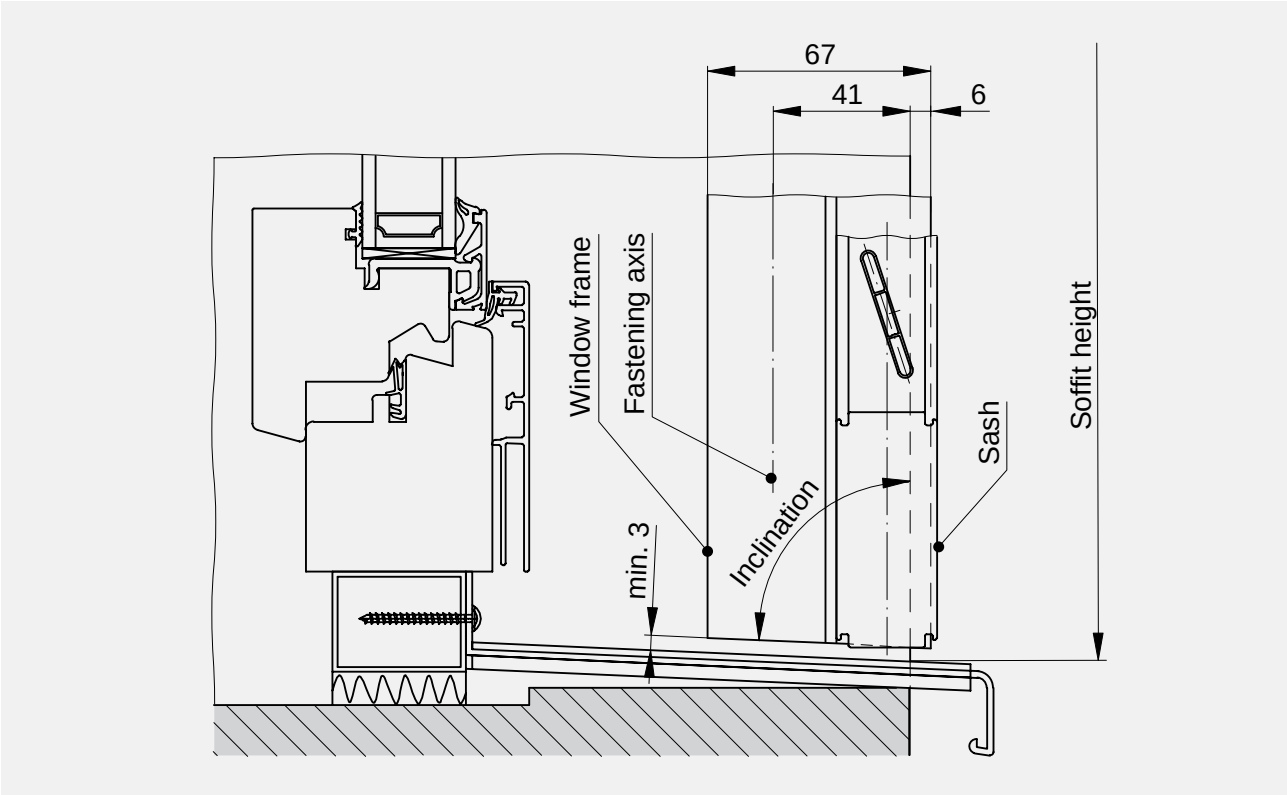

END STOP DIAGRAMS

Scheme 1

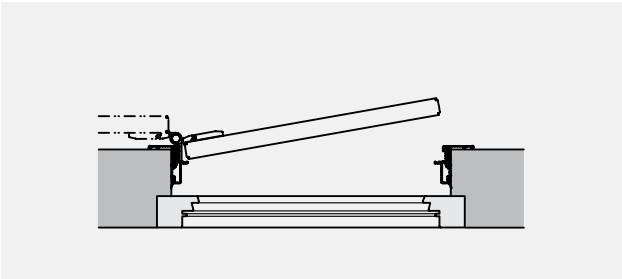

Scheme 1L

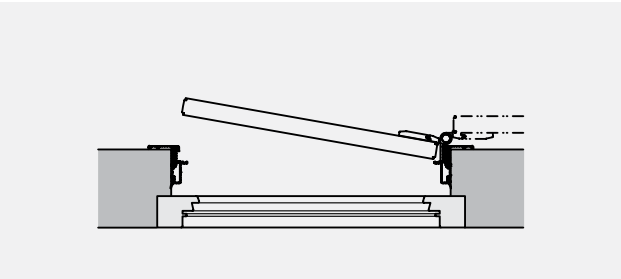

Scheme 1R

Scheme 2

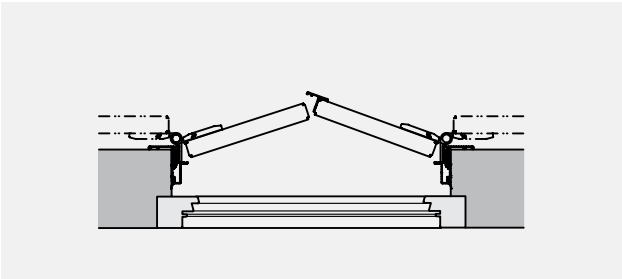

Scheme 2

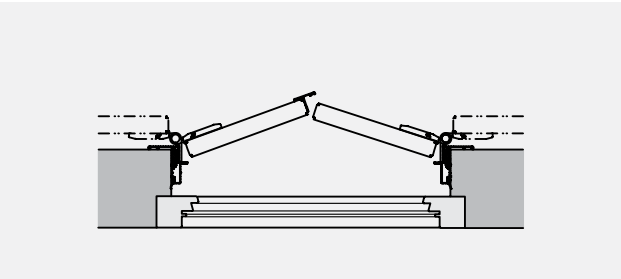

Scheme 2S

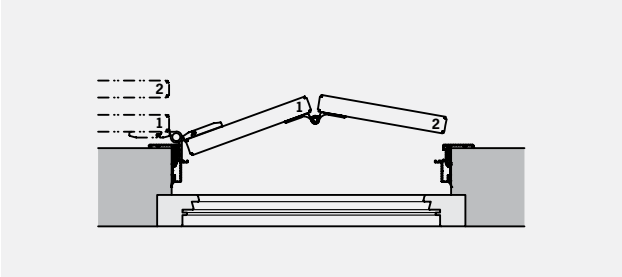

Scheme 2L

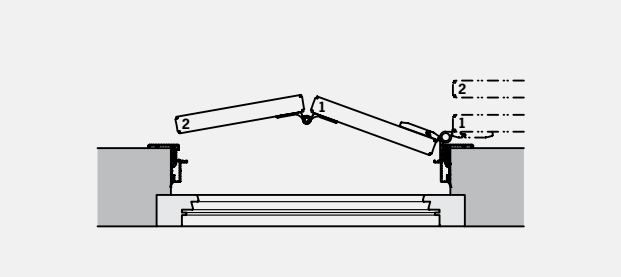

Scheme 2R

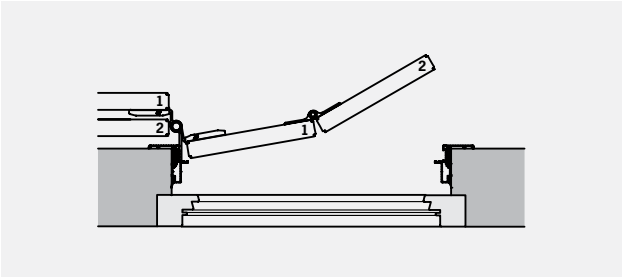

Scheme 2LA

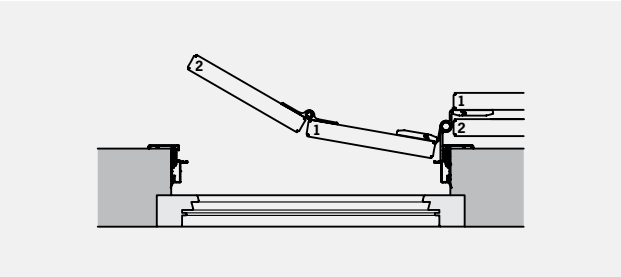

Scheme 2RA

Scheme 3

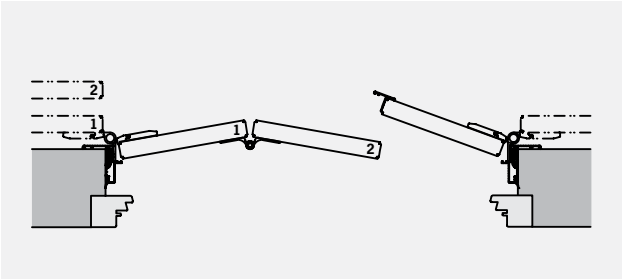

Scheme 3L

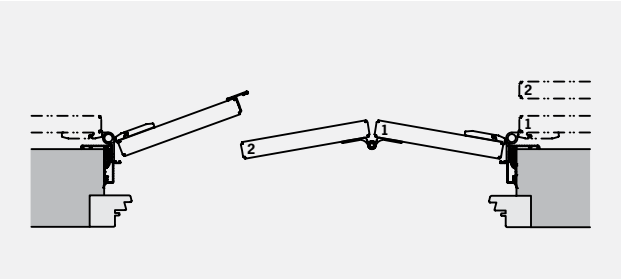

Scheme 3R

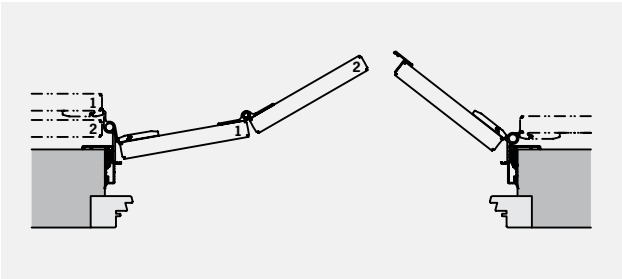

Scheme 3LA

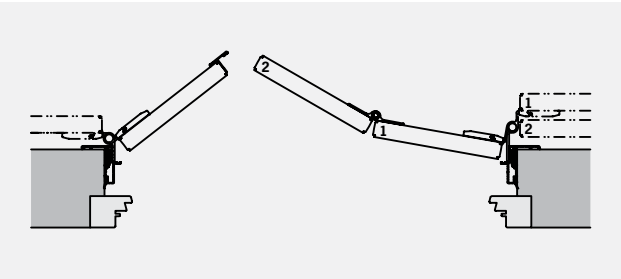

Scheme 3RA

Scheme 4

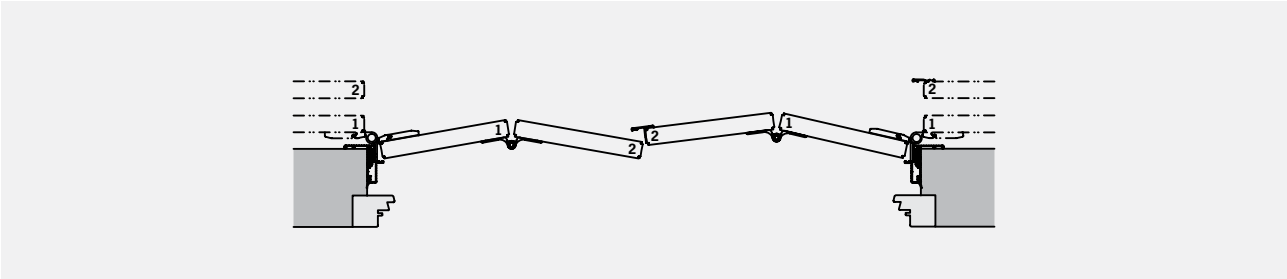

Scheme 4

Baffle plate

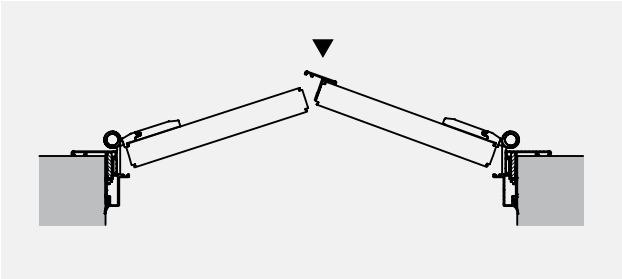

right

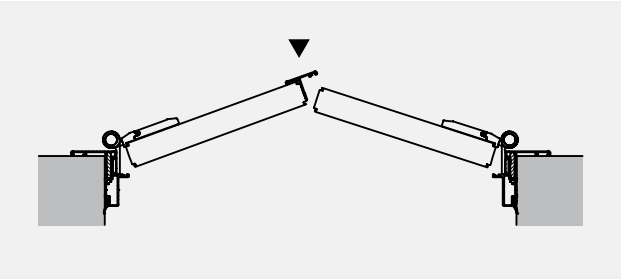

left

FRIEZE

Horizontal frieze

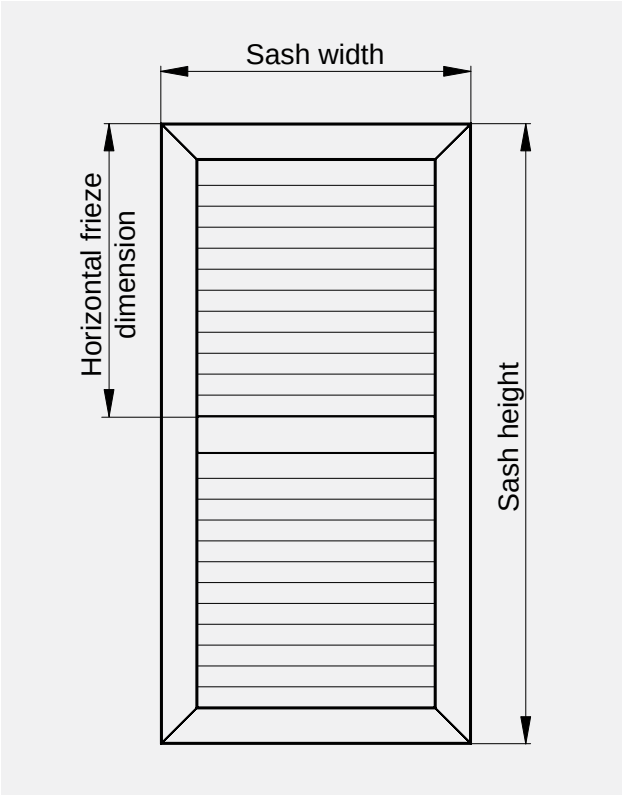

Horizontal frieze dimension min.
300

RETENTION ELEMENTS

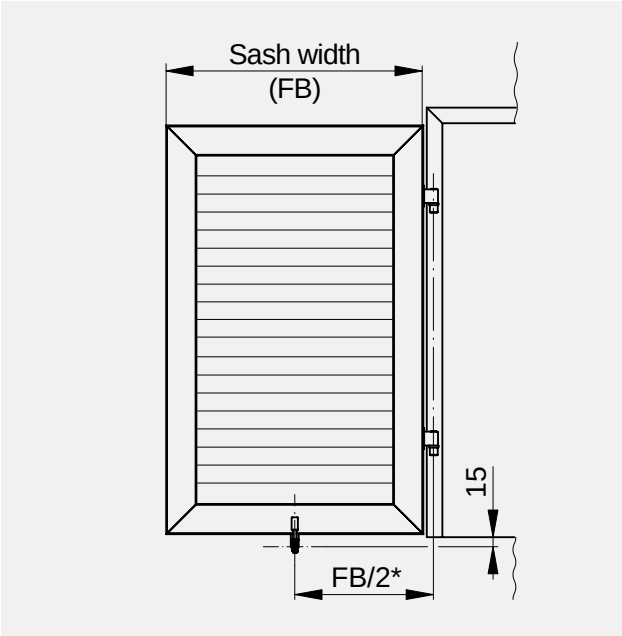

* min. 180

Shutter holder

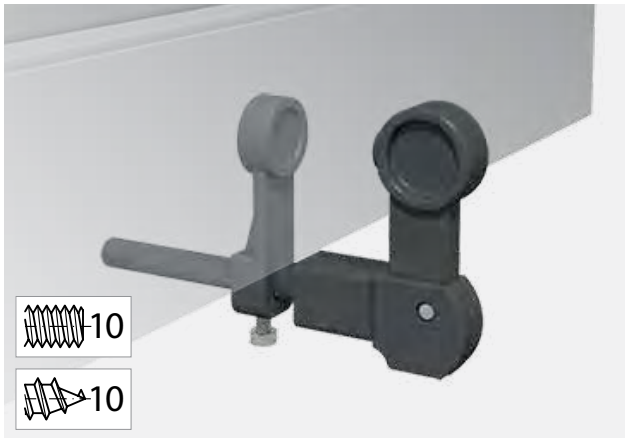

Lady's head

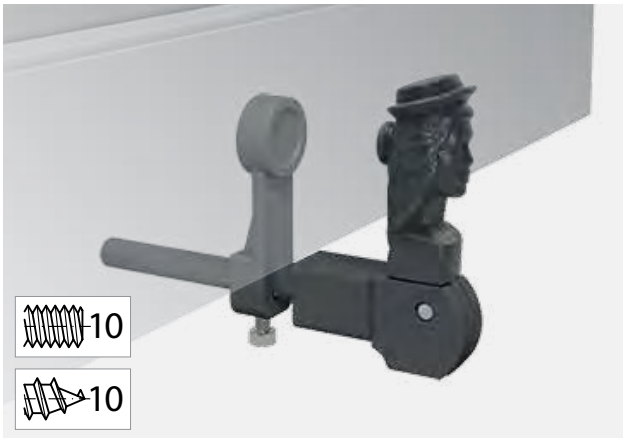

Shutter latches

Convenience casement holder

Type 2

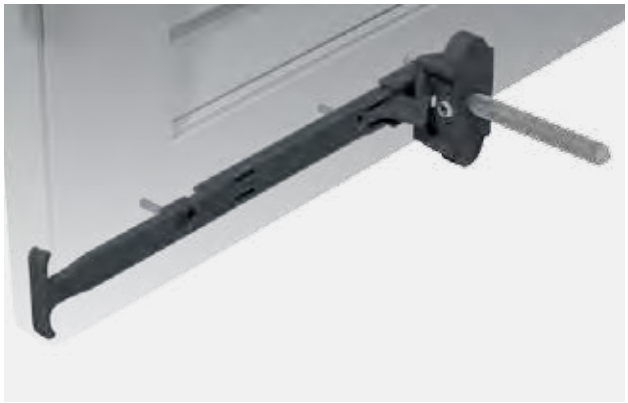

Type 3

LOCKERS

Rod lock 2F

Snap lock

Espagnolette round

Wing shutter with installation frame

LIMIT DIMENSIONS WINDOW	24
MOUNTING SITUATIONS 3-SIDED FRAME	25
MOUNTING SITUATIONS 4-SIDED FRAME	27
SASH TYPES	29
PRE-DRILLED HOLES	32
SECTIONS/DETAILS: 3-SIDED FRAME	36
SECTIONS/DETAILS: 4-SIDED FRAME	42
END STOP DIAGRAMS	50
FRIEZE	52
RETENTION ELEMENTS	53
LOCKERS	56

V1.2.0 | 20150901

LIMIT DIMENSIONS WINDOW (SOFFIT HEADROOM SIZES)

Version	Width min. (B)	Width max. (B)	Height min. (Al)	Height max. (Al)	Surface max. [m²]
1 sash	300	1000	800	2500 2200[1]	2.5 2.2[1]
2 sashs	600	2000 1800[1]			5 3.96[1]
3 sashs	900	2500 1800[1]			6.25 3.96[1]
4 sashs	1100	3000 1800[1]			7.5 3.96[1]

[1] With insect screen

Definitions of dimensions 84

MOUNTING SITUATIONS 3-SIDED FRAME

Vertical section: Installation frame 40 x 31

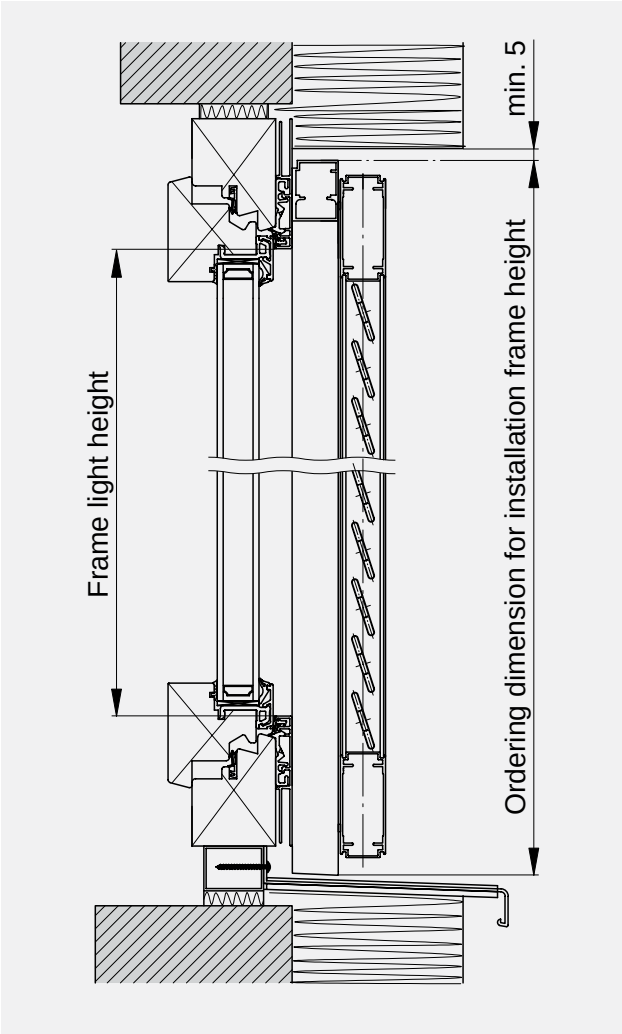

Vertical section: Installation frame 40 x 50

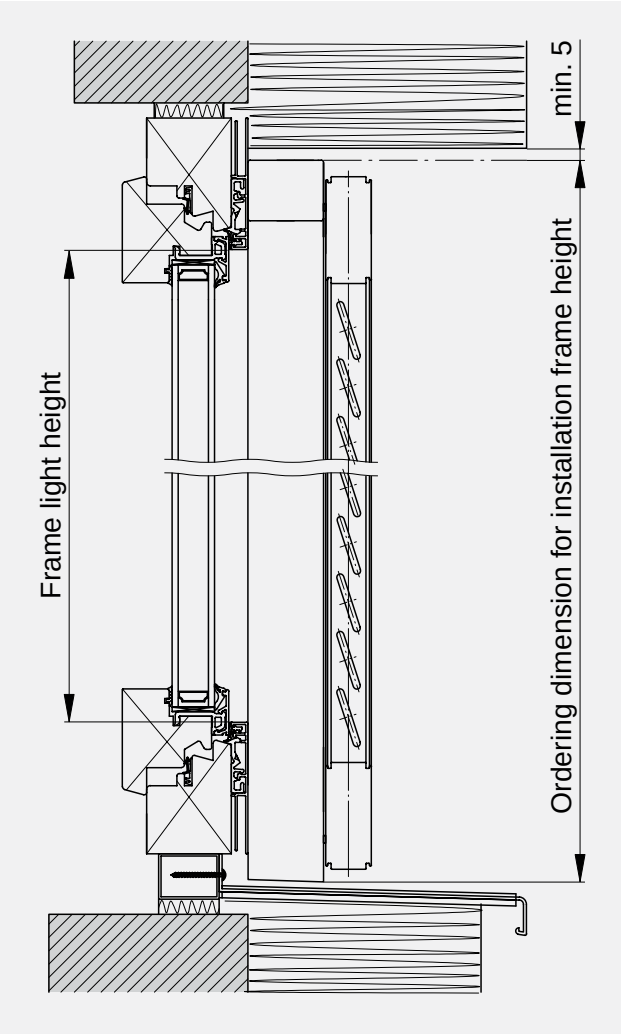

Horizontal section: Installation frame 40 x 31

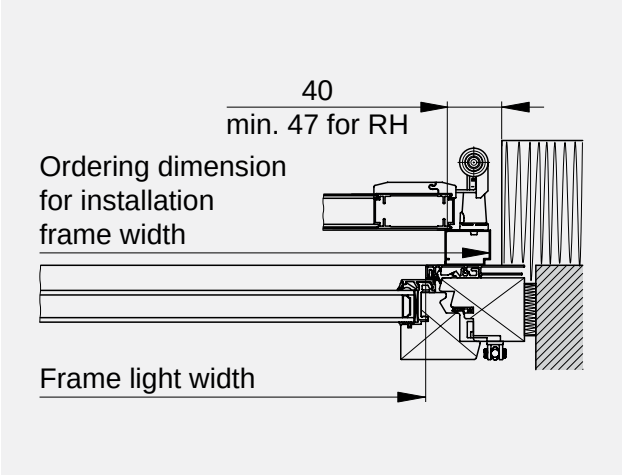

Horizontal section: Installation frame 40 x 50

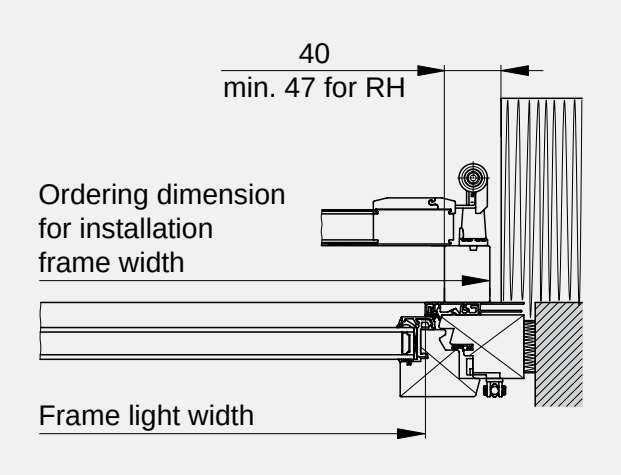

Sections / Details 36

Vertical section: Installation frame 40 x 120

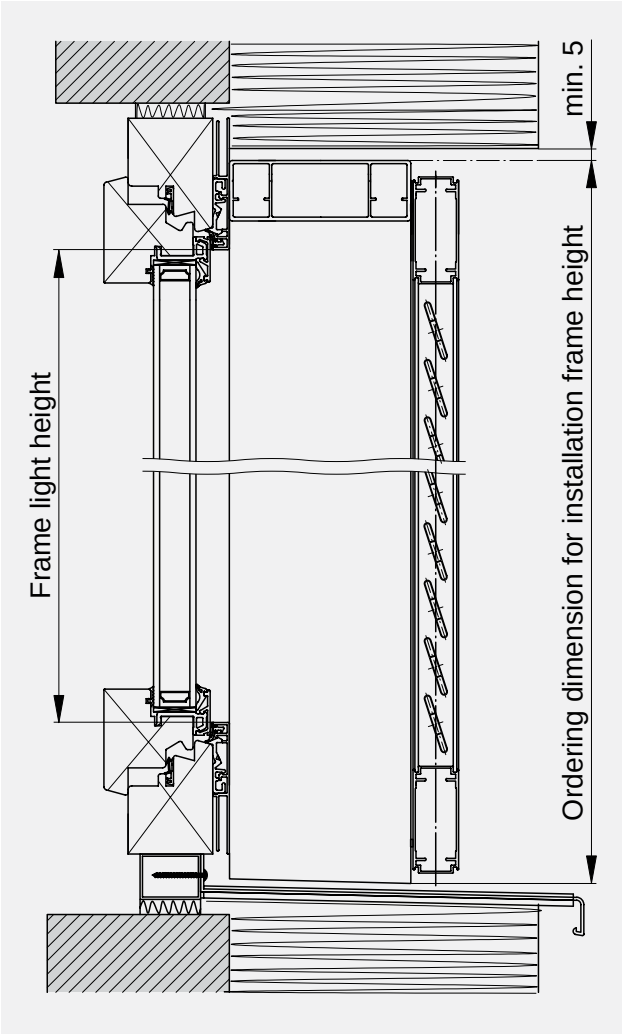

Horizontal section: Installation frame 40 x 120

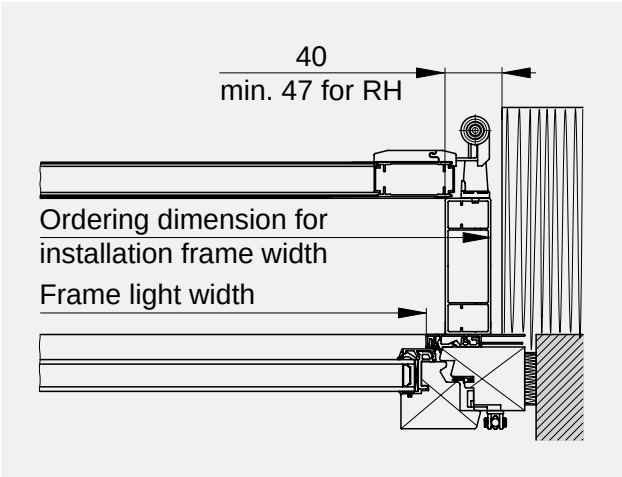

Sections / Details 36

MOUNTING SITUATIONS 4-SIDED FRAME

Vertical section: Installation frame 40 x 31

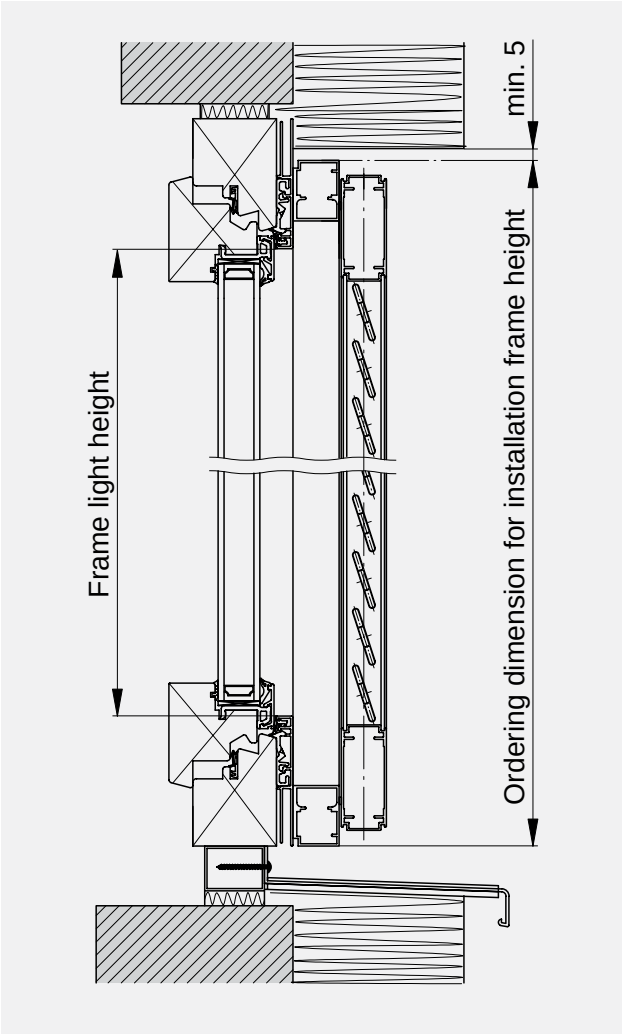

Vertical section: Installation frame 40 x 50

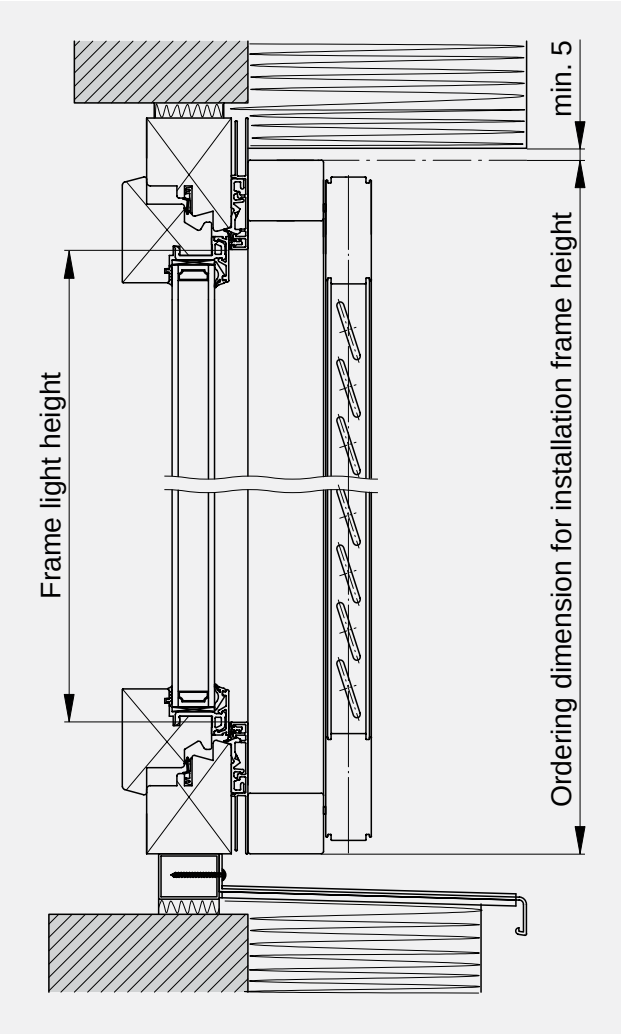

Horizontal section: Installation frame 40 x 31

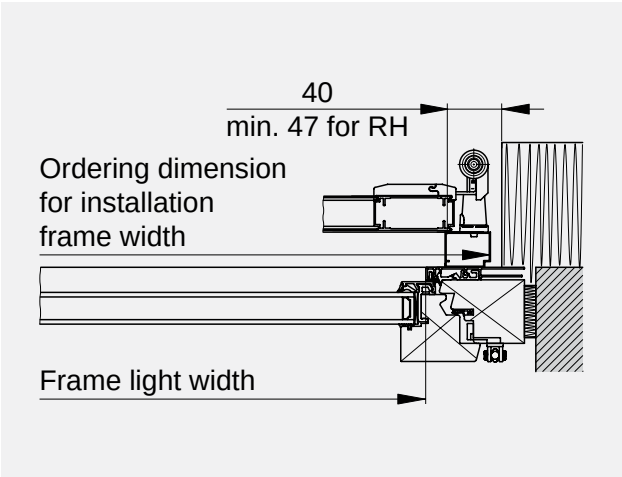

Horizontal section: Installation frame 40 x 50

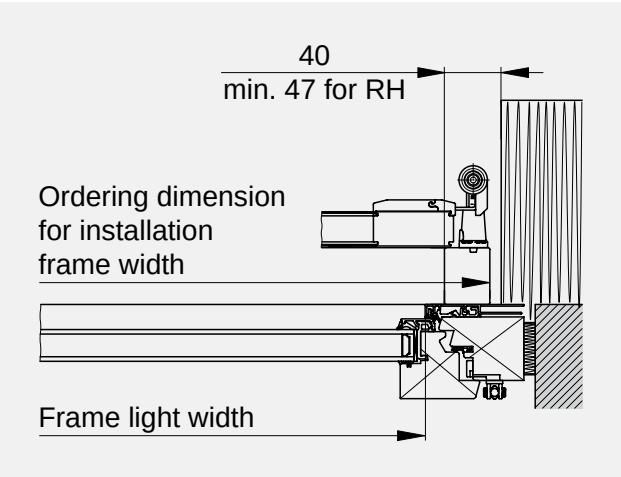

Sections / Details 42

Vertical section: Installation frame 40 x 120

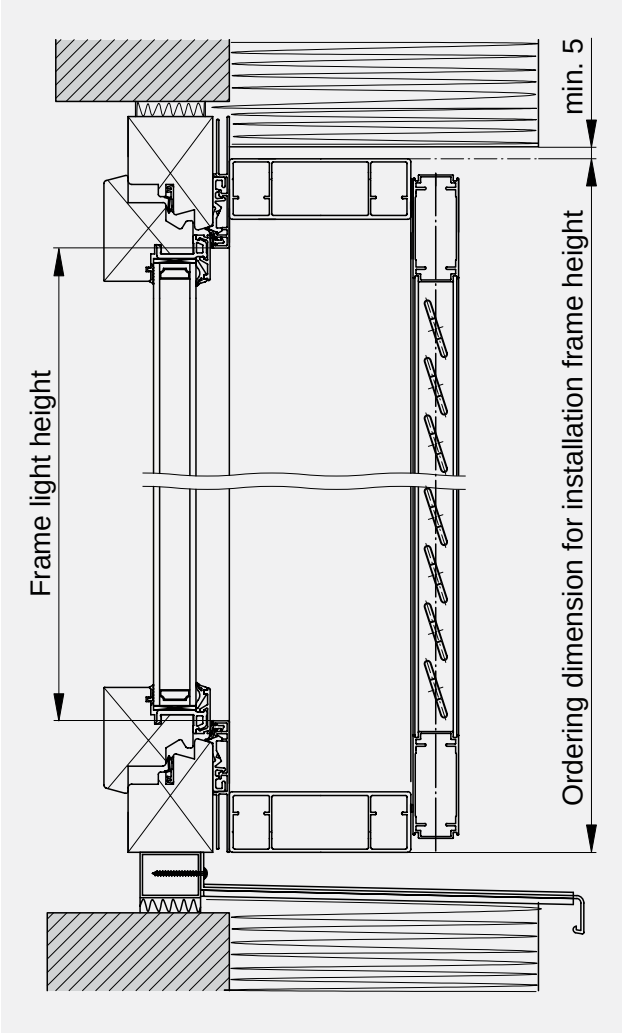

Vertical section: Installation frame 40 x 50, with insect screen

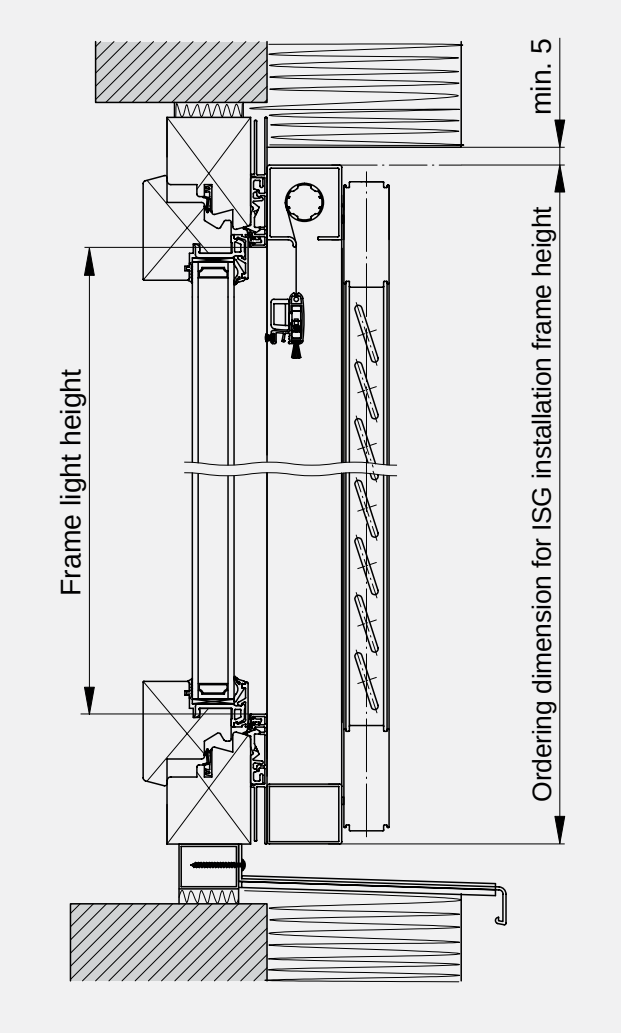

ISG: Insect screen

Horizontal section: Installation frame 40 x 120

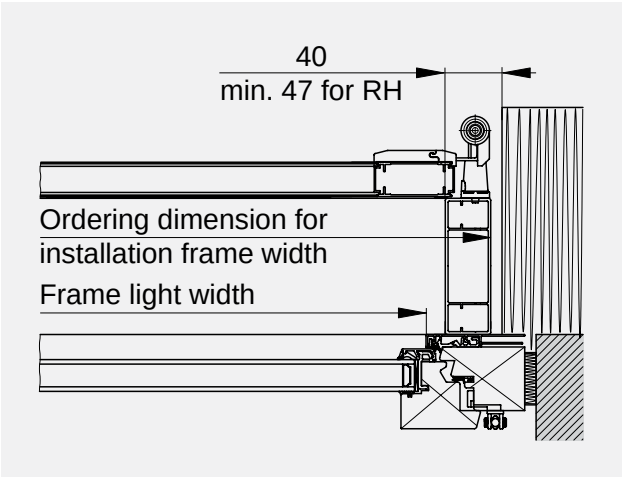

Horizontal section: Installation frame 40 x 50, with insect screen

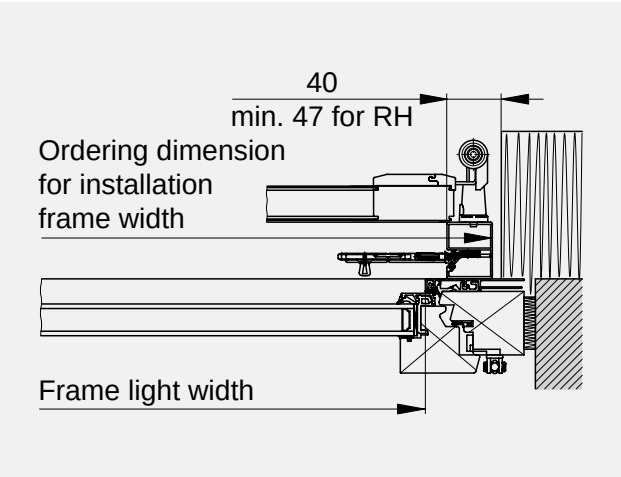

Sections / Details 42

SASH TYPES

Fixed slats

Model A

Model R

Model T

Model EZ

Movable slats

Model B

Fillings

Model C

Model CH

Model F

Model G ISO

PRE-DRILLED HOLES

Installation frame 40 x 31 / 40 x 50 / 40 x 120

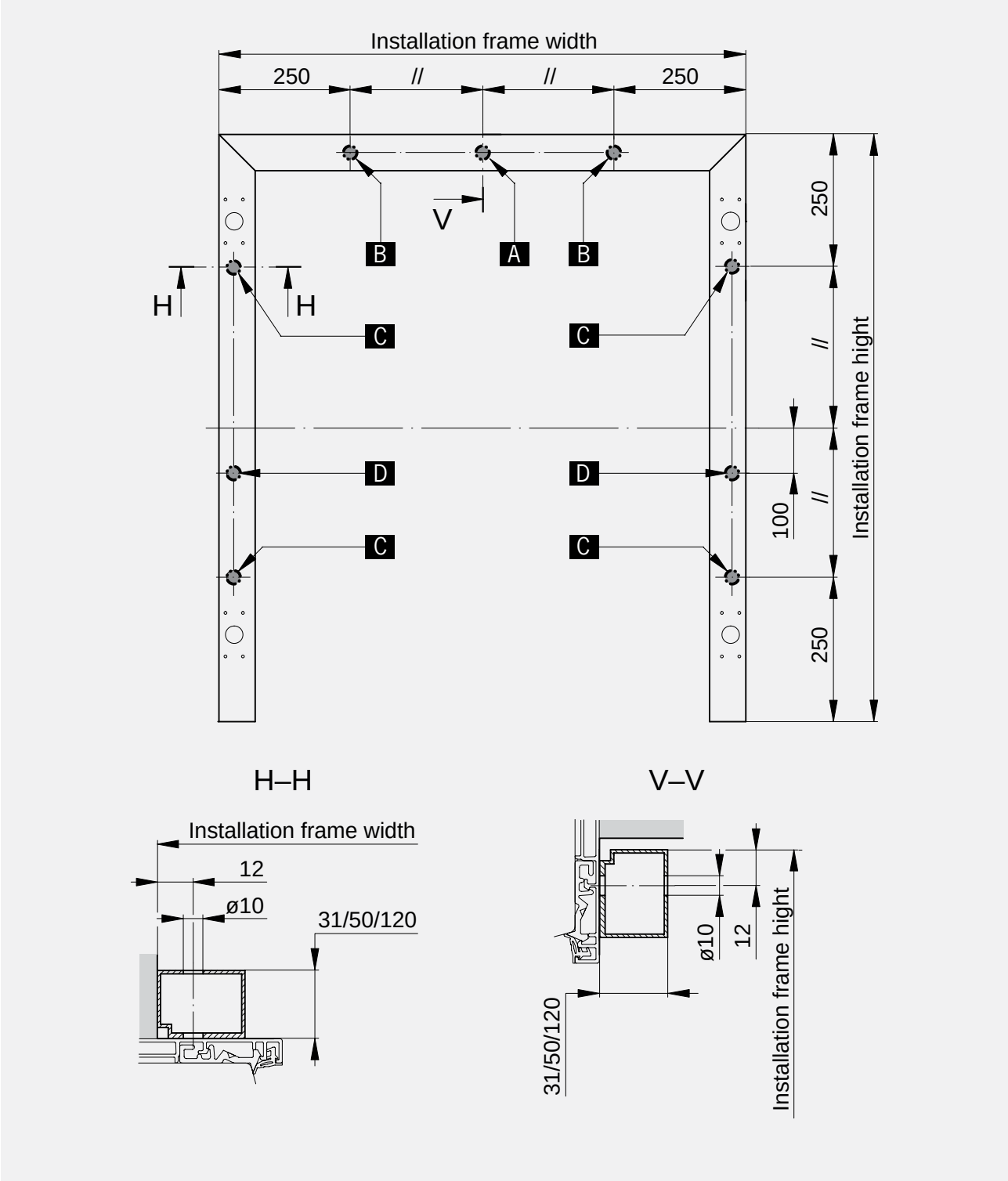

Installation frame width	Holes
< 1800	A
1800 – 3000	A + B

Installation frame height	Holes
< 1800	C
1800 – 2500	C + D

Installation frame 40 x 31, with lateral pre-drilled holes

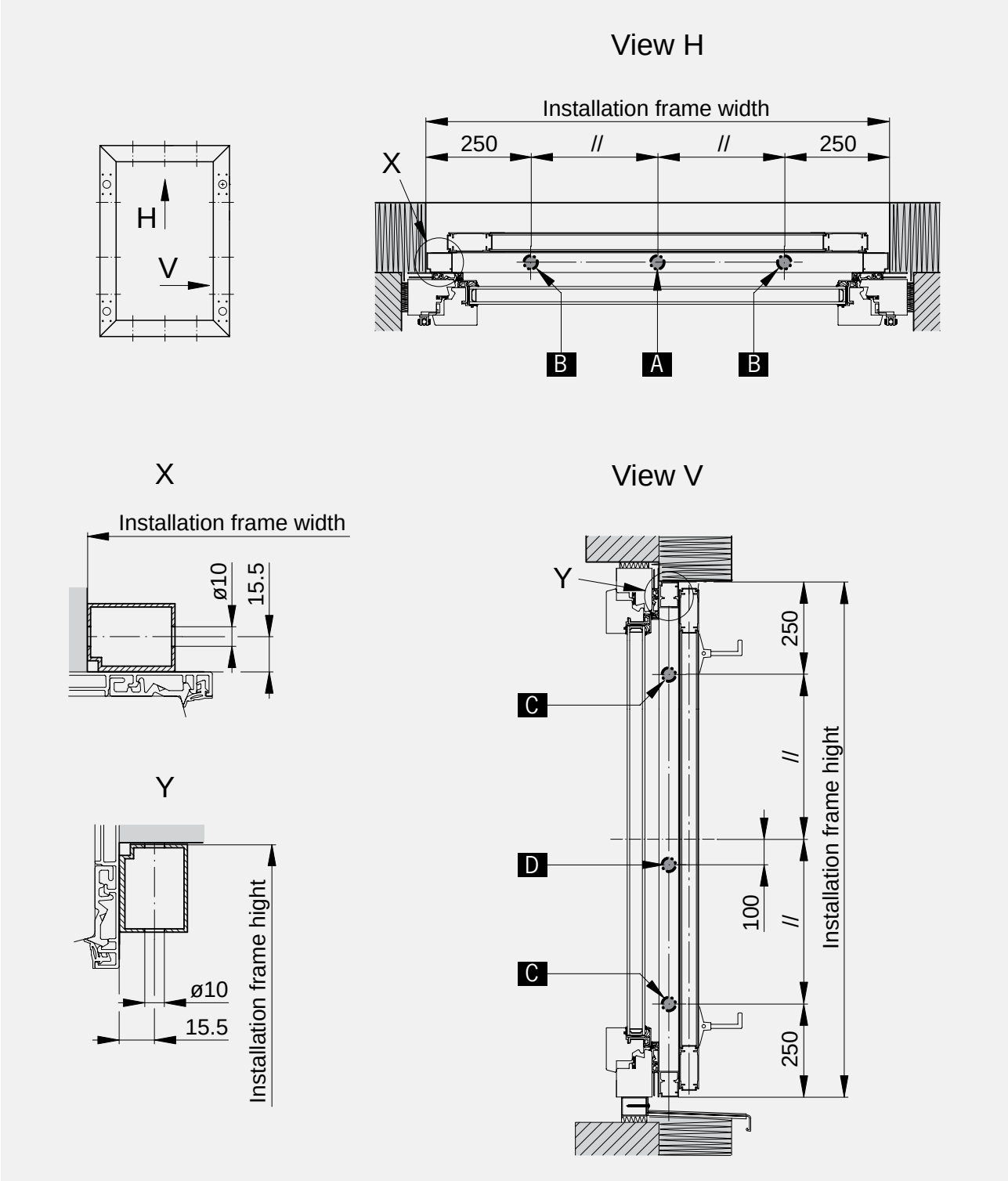

Installation frame width	Holes
< 1800	A
1800 – 3000	A + B

Installation frame height	Holes
< 1800	C
1800 – 2500	C + D

Installation frame 40 x 50, with insect screen

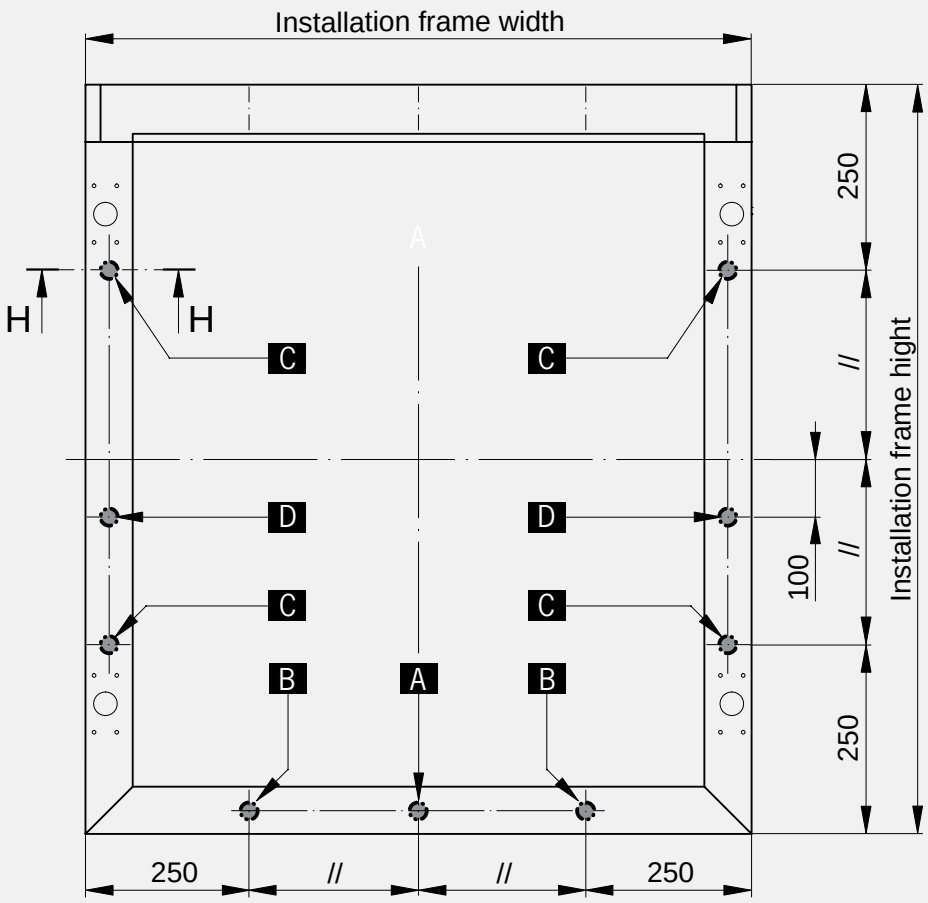

H–H

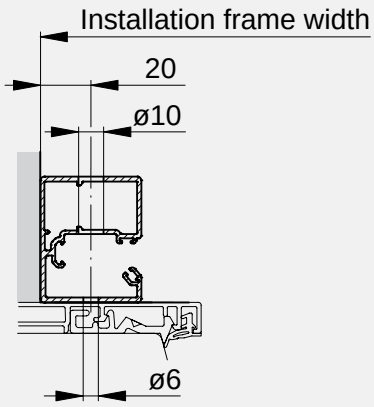

Installation frame width	Holes	Installation frame height	Holes
< 1800	A	< 1800	C
1800 – 3000	A + B	1800 – 2500	C + D

Installation frame 40 x 50, with insect screen and lateral pre-drilled holes

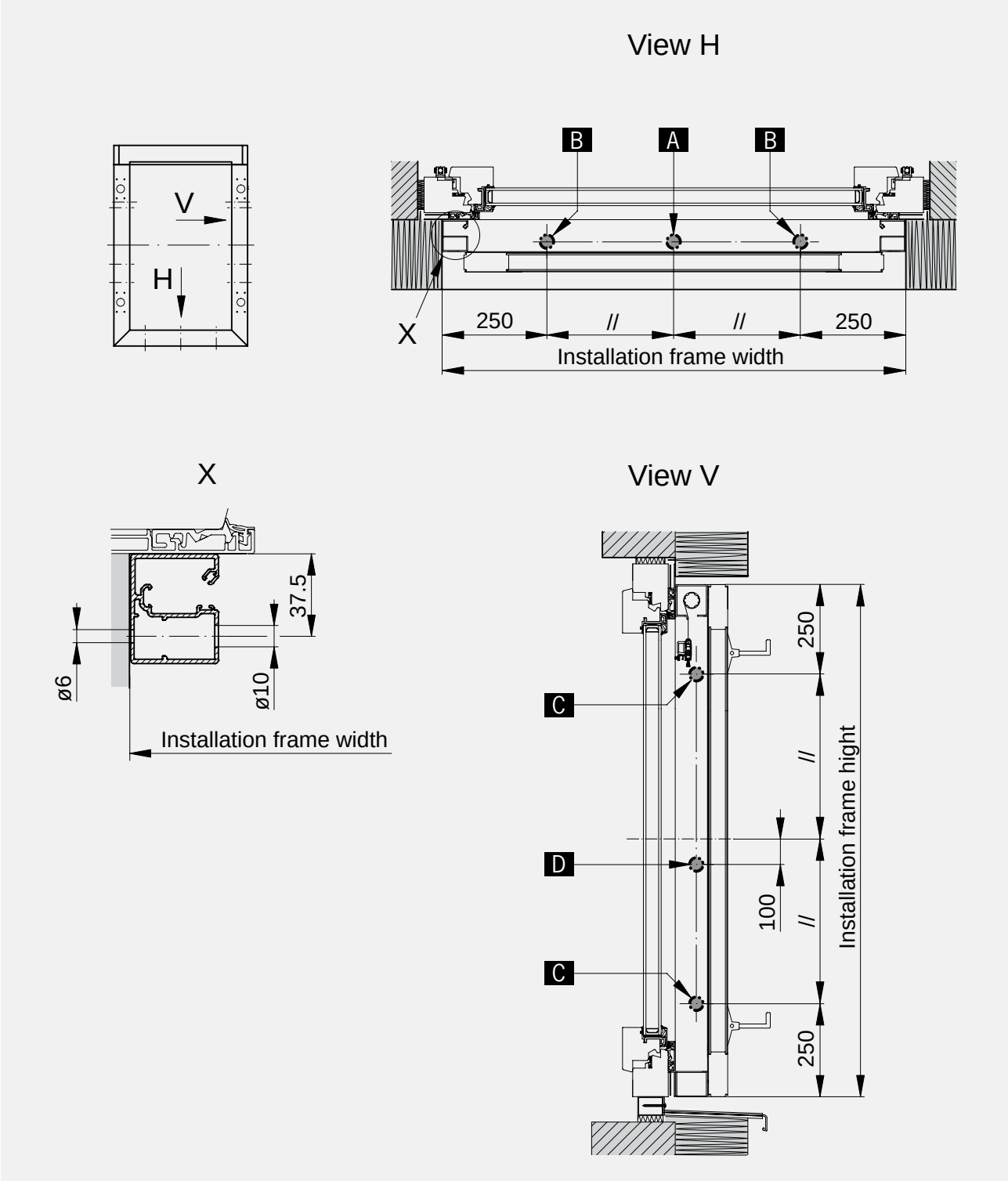

Installation frame width	Holes
< 1800	A
1800 – 3000	A + B

Installation frame height	Holes
< 1800	C
1800 – 2500	C + D

SECTIONS / DETAILS: 3-SIDED FRAME

Vertical section: Installation frame 40 x 31

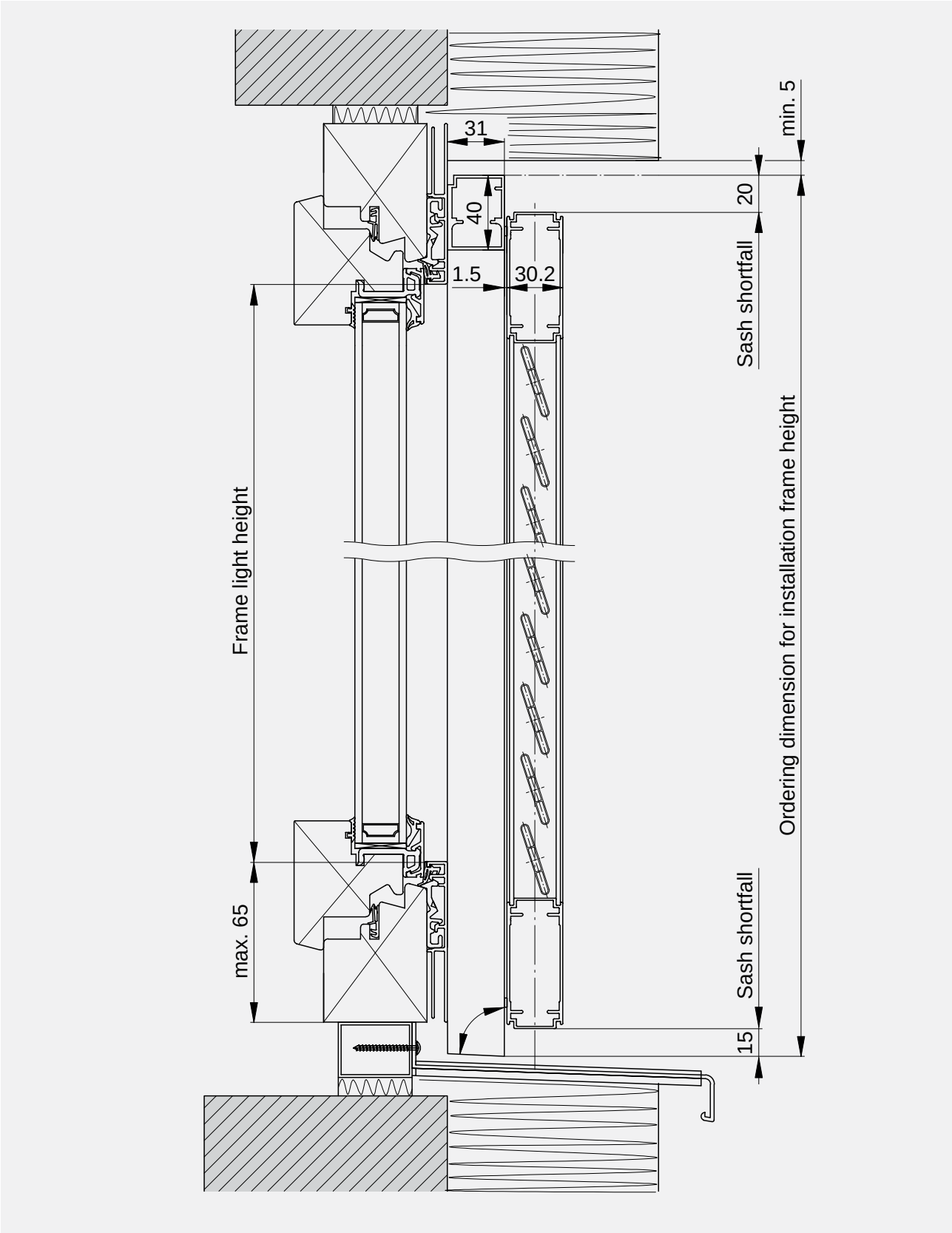

Horizontal section: Installation frame 40 x 31

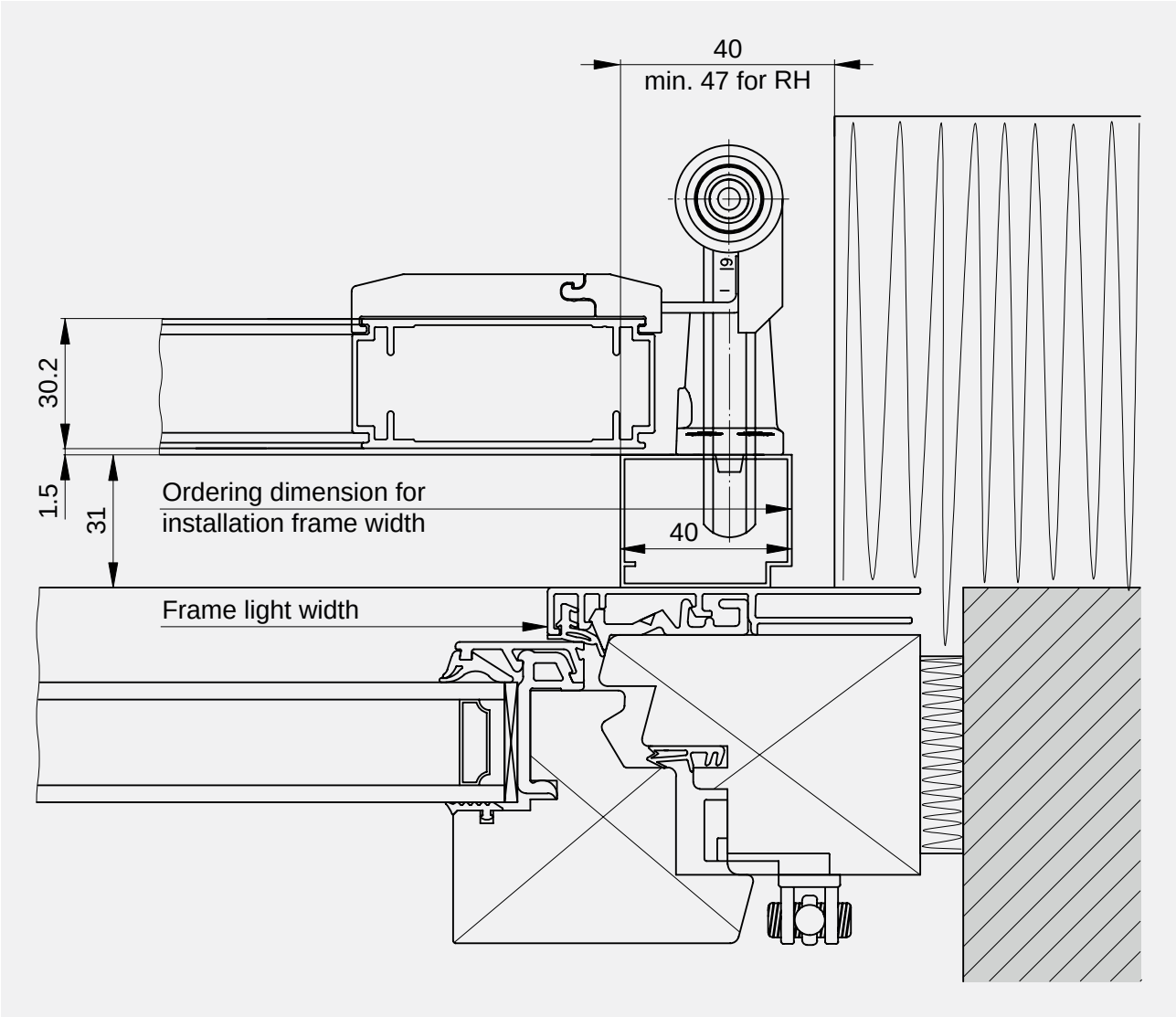

Vertical section: Installation frame 40 x 50

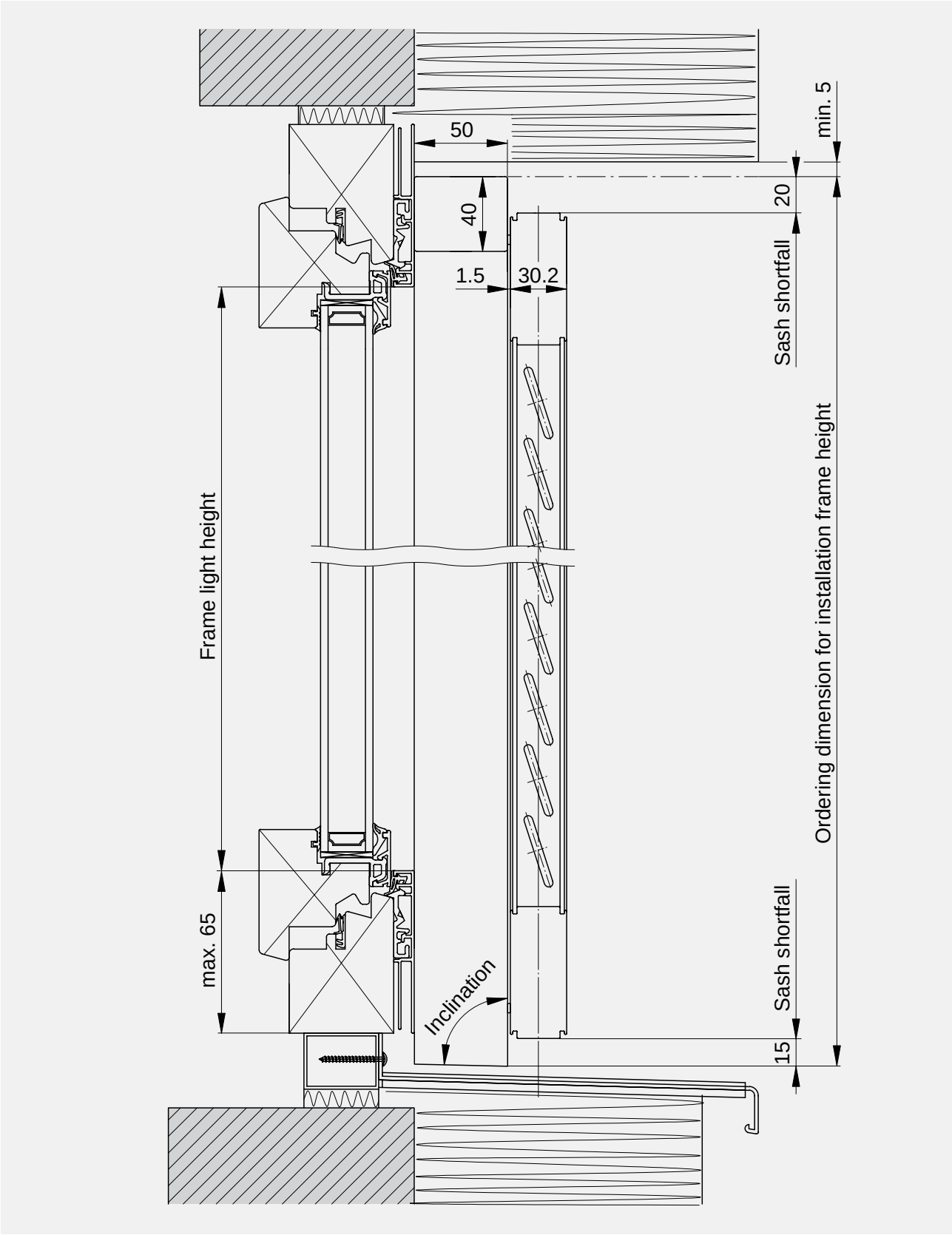

Horizontal section: Installation frame 40 x 50

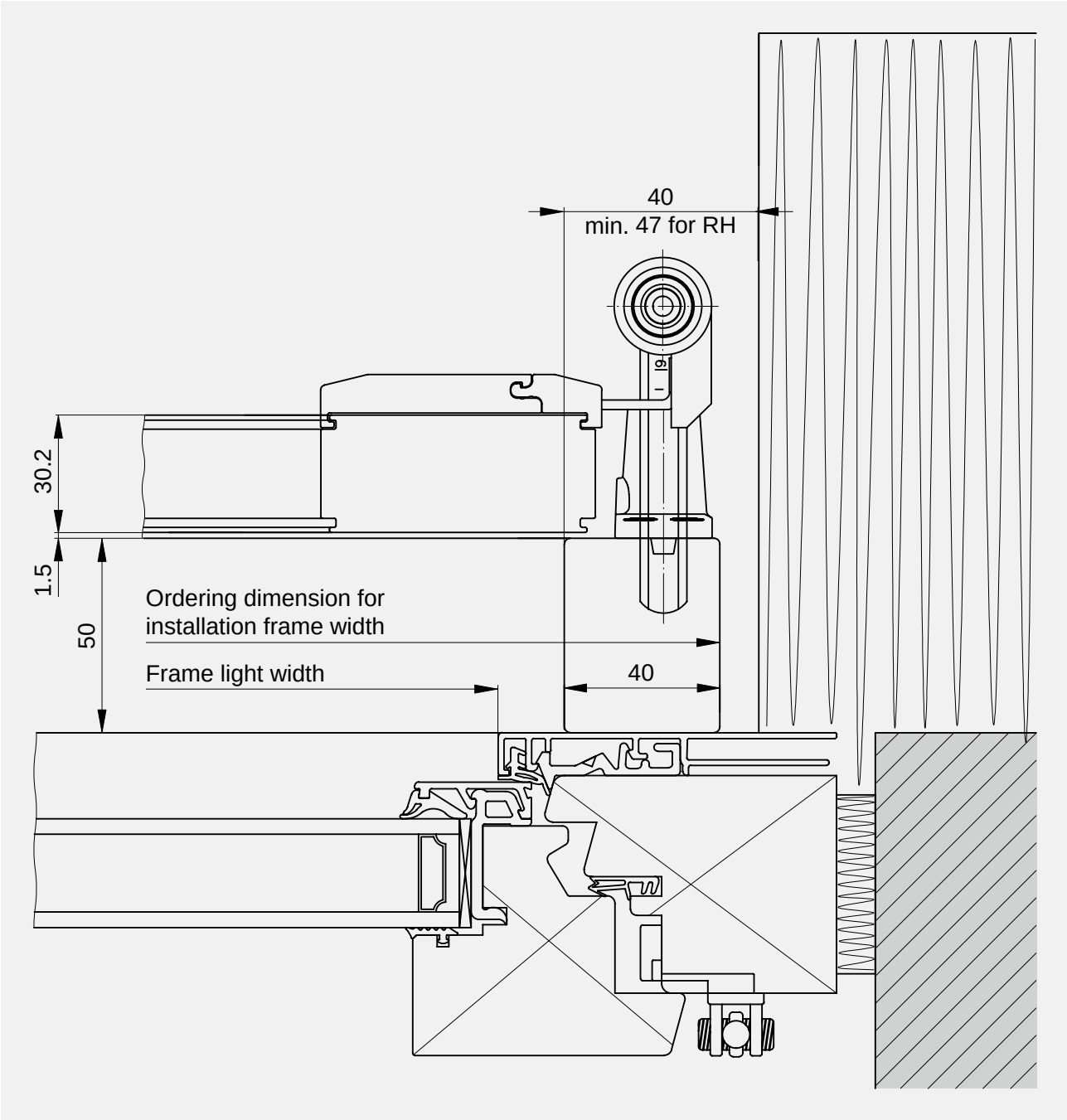

Vertical section: Installation frame 40 x 120

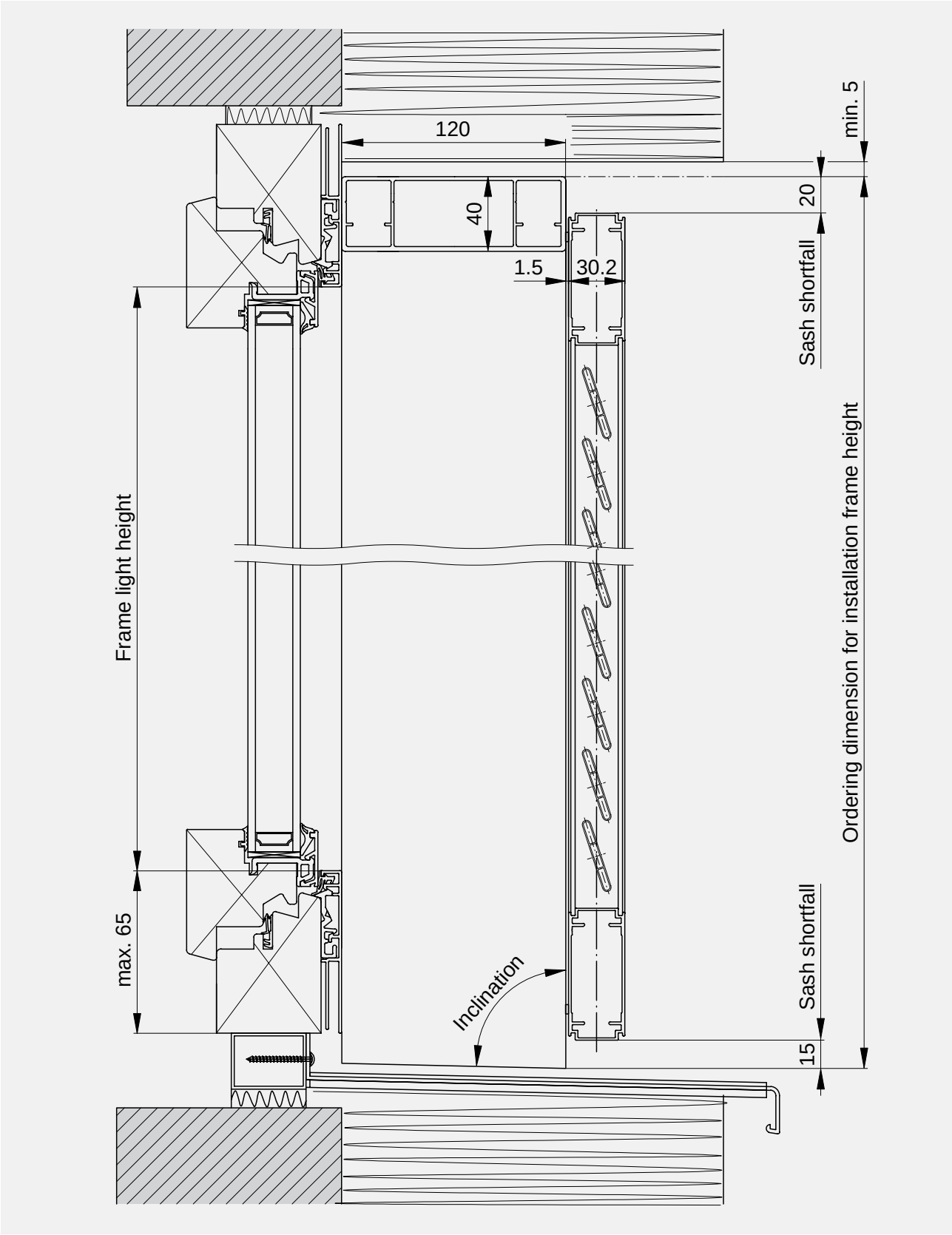

Horizontal section: Installation frame 40 x 120

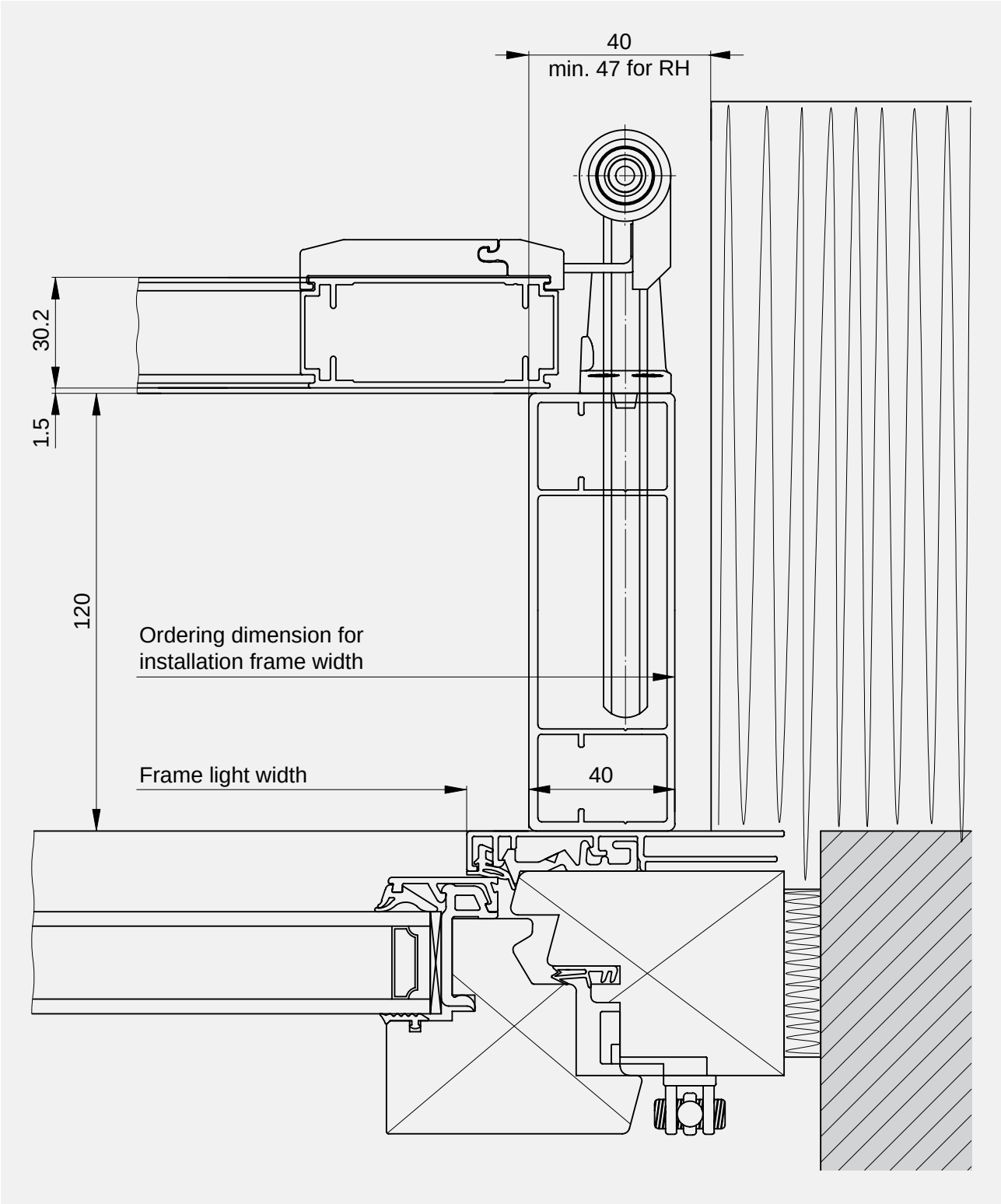

SECTIONS / DETAILS: 4-SIDED FRAME

Vertical section: Installation frame 40 x 31

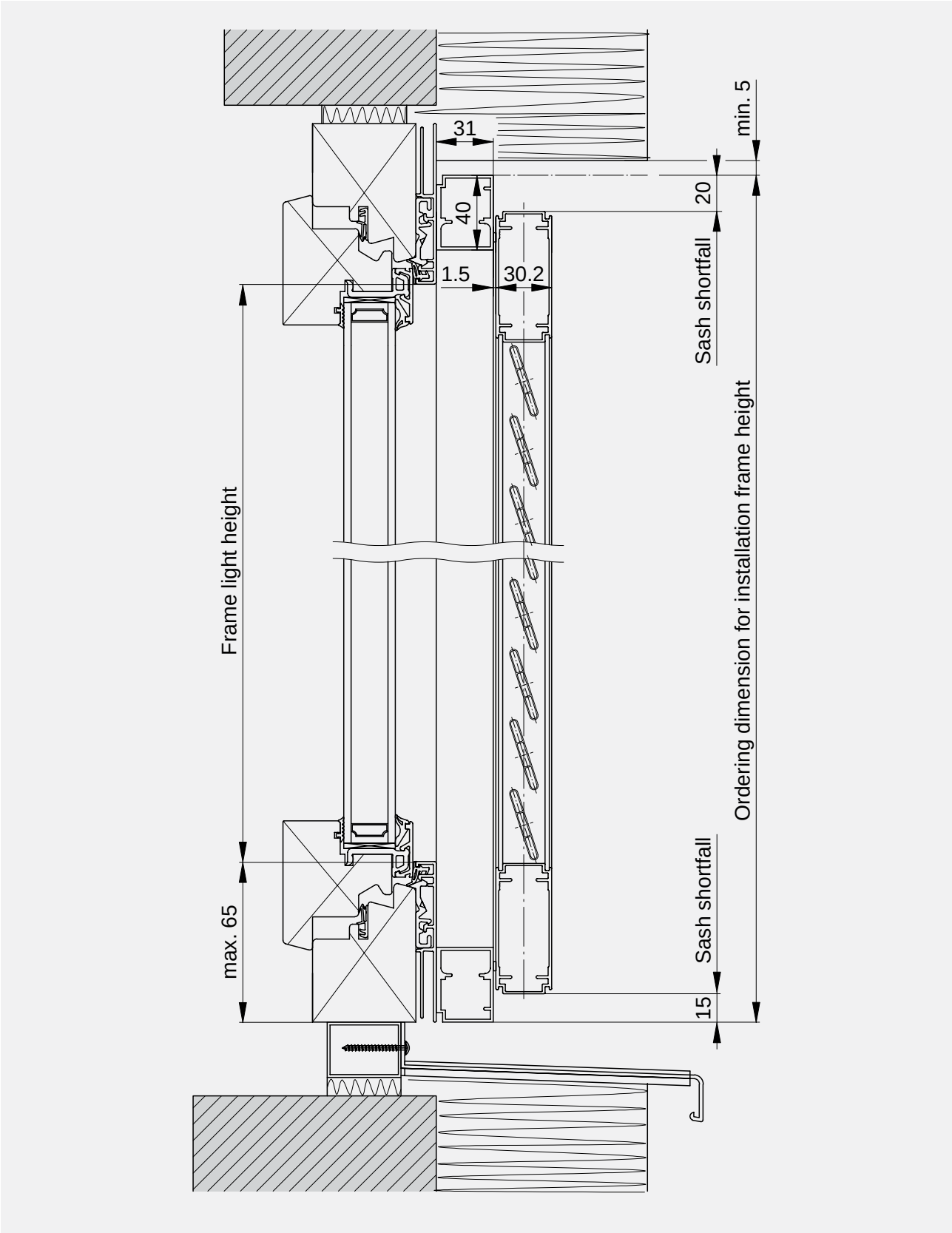

Horizontal section: Installation frame 40 x 31

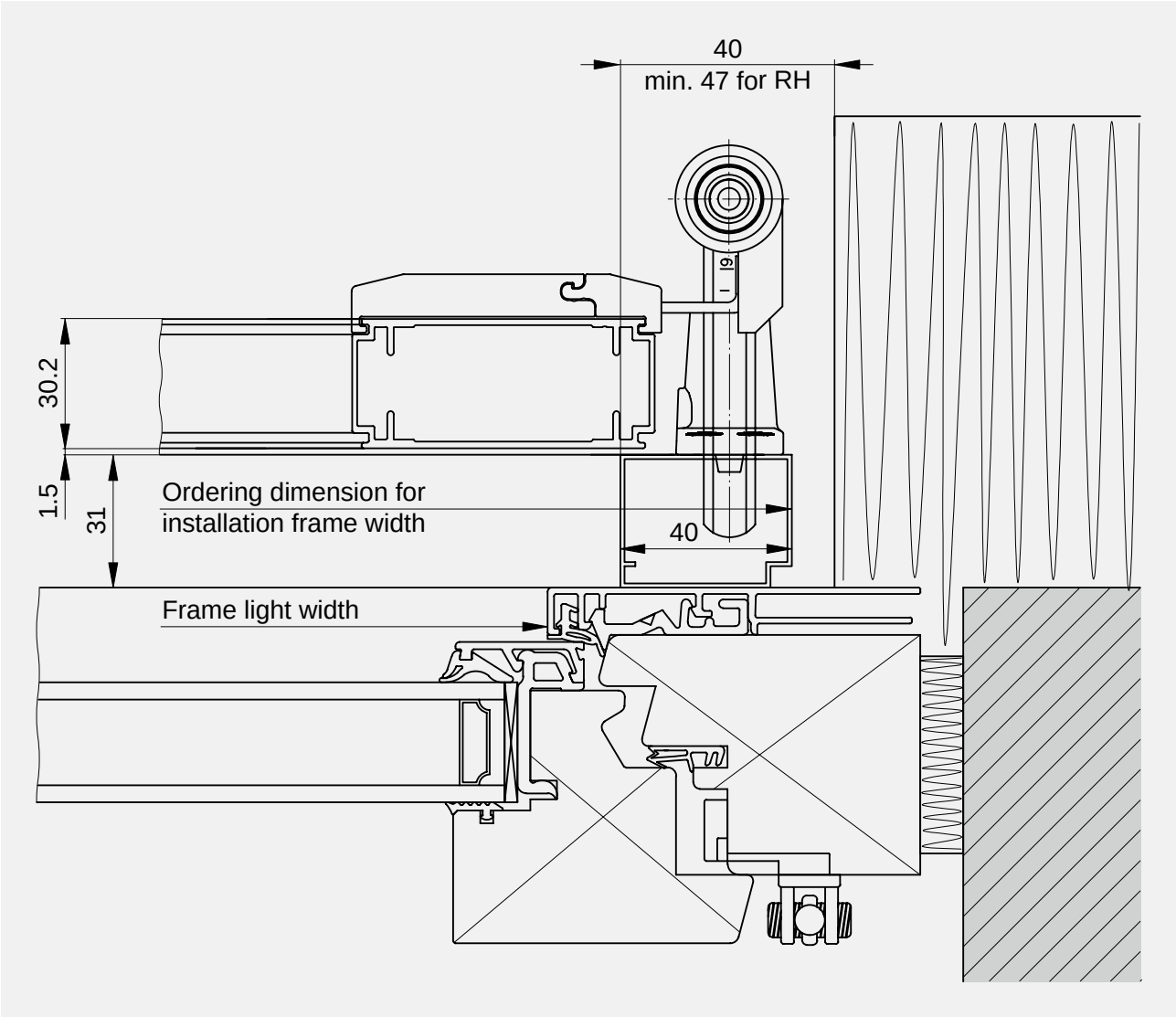

Vertical section: Installation frame 40 x 50

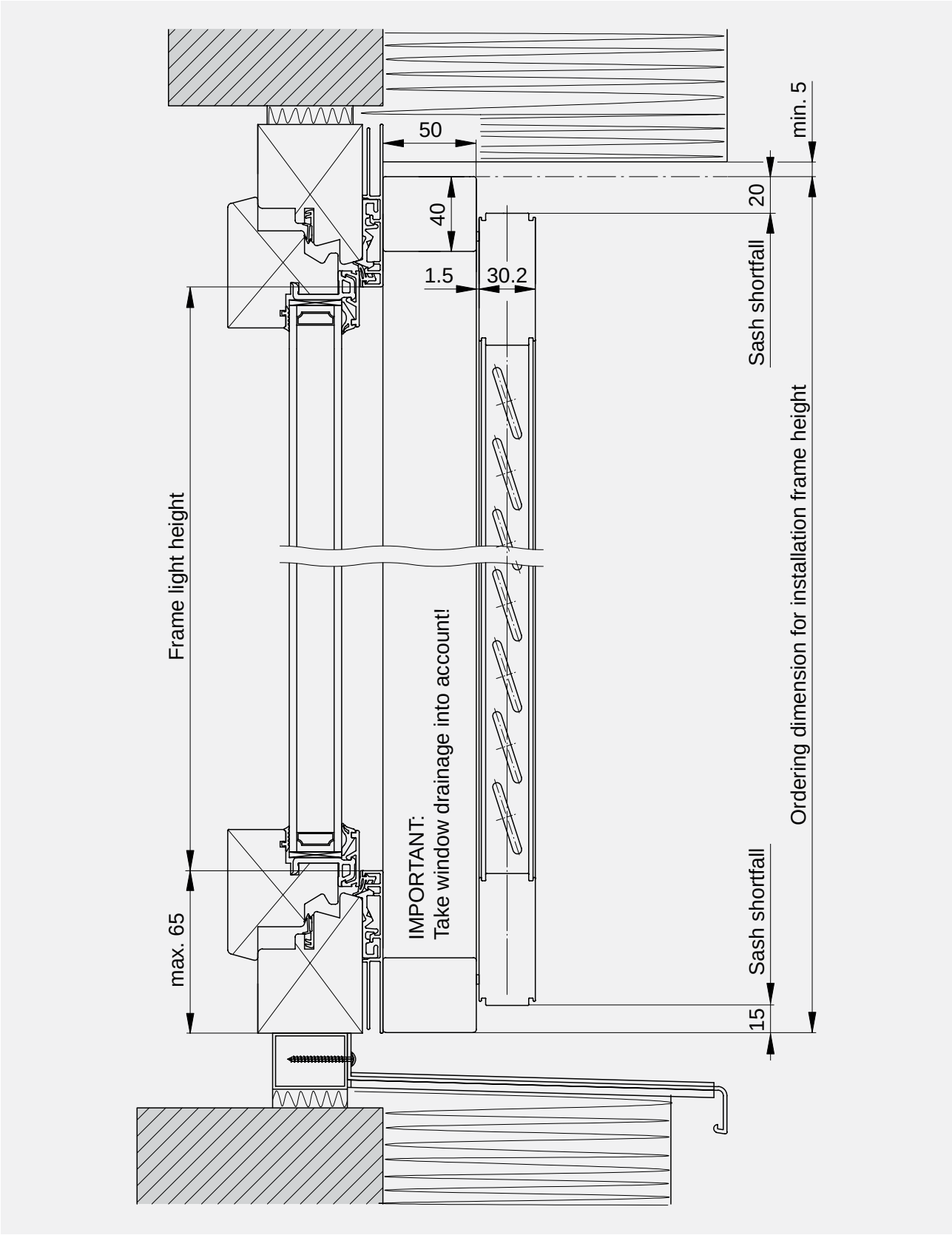

Horizontal section: Installation frame 40 x 50

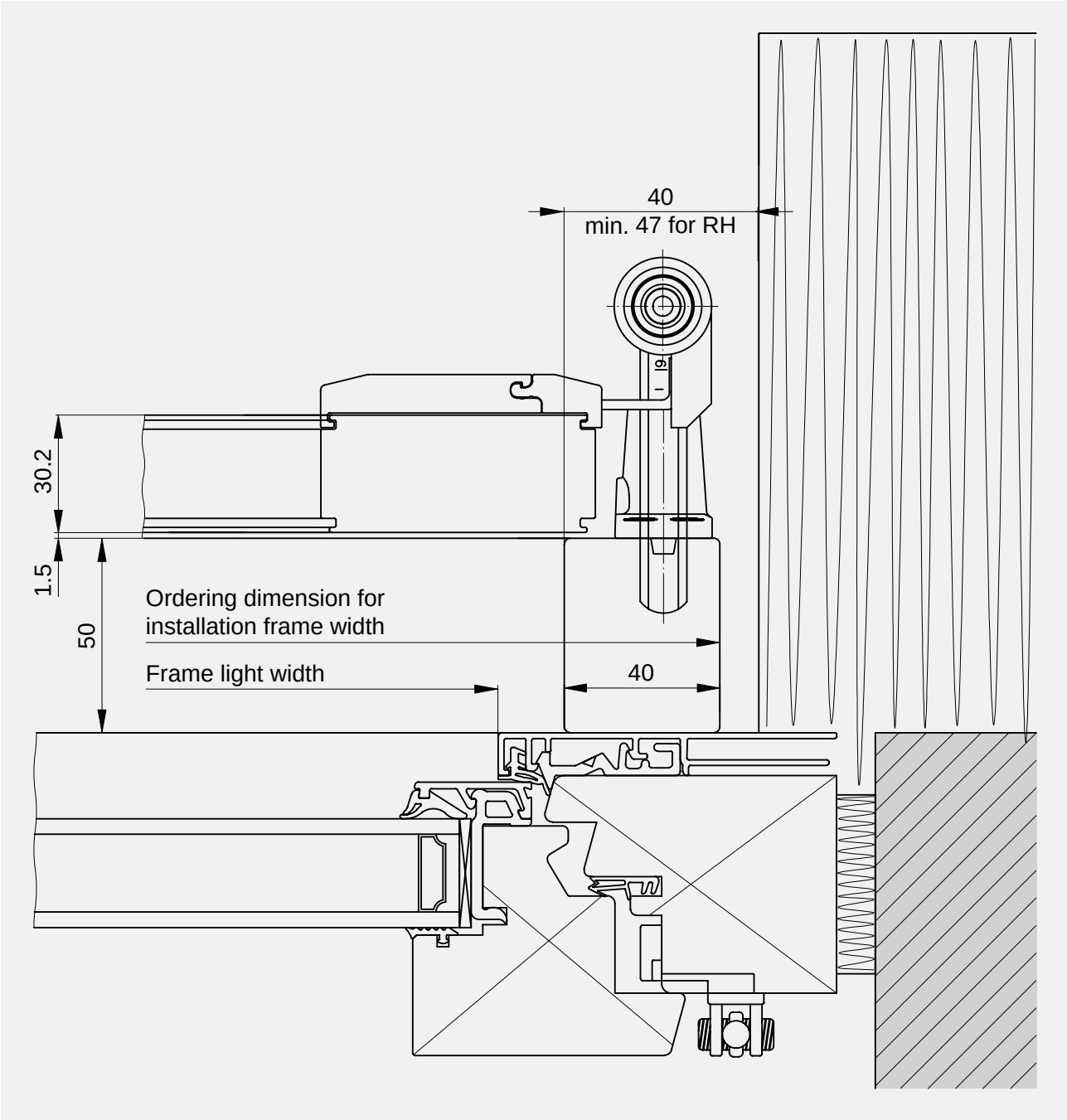

Vertical section: Installation frame 40 x 120

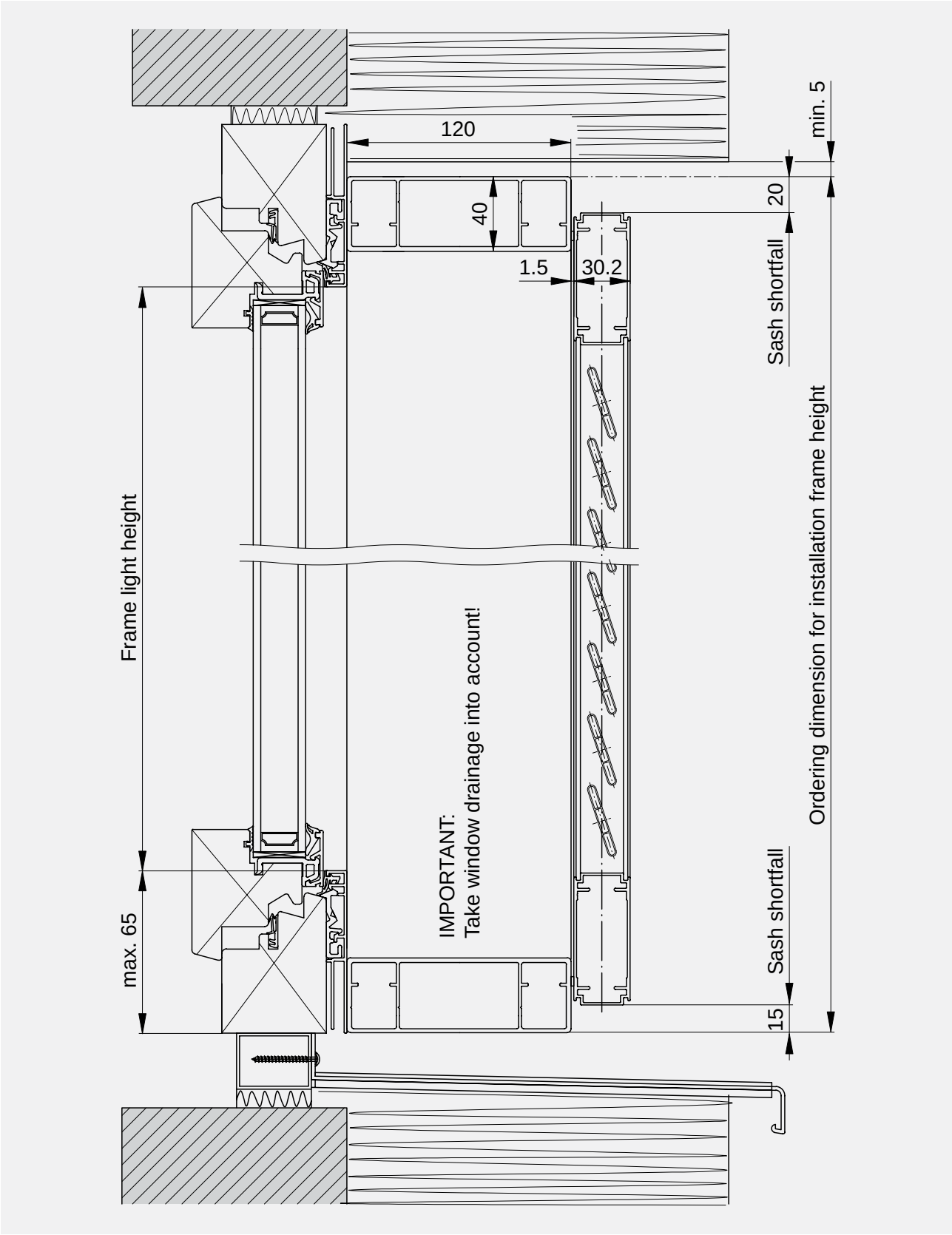

Horizontal section: Installation frame 40 x 120

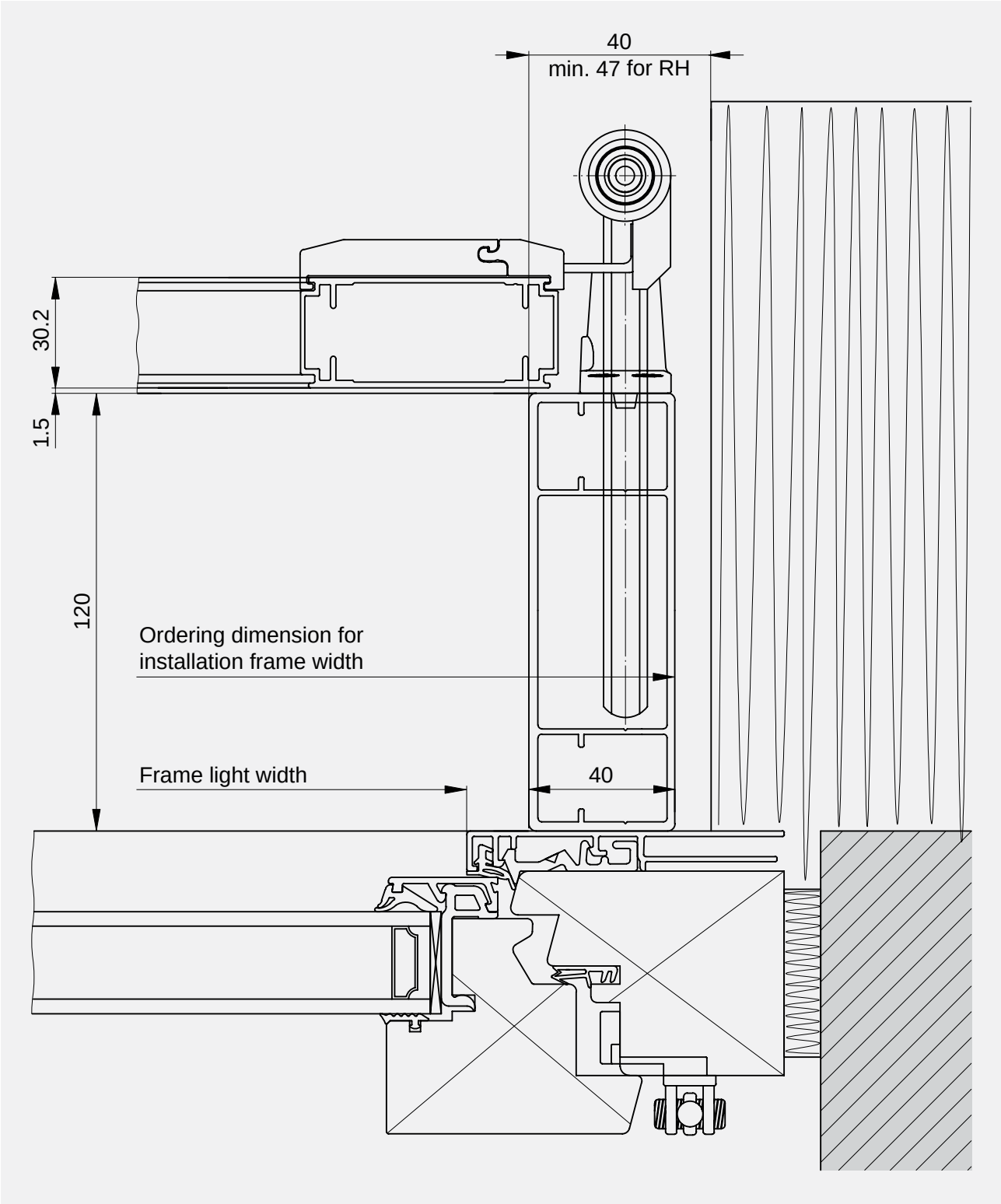

Vertical section: Installation frame 40 x 50, with insect screen

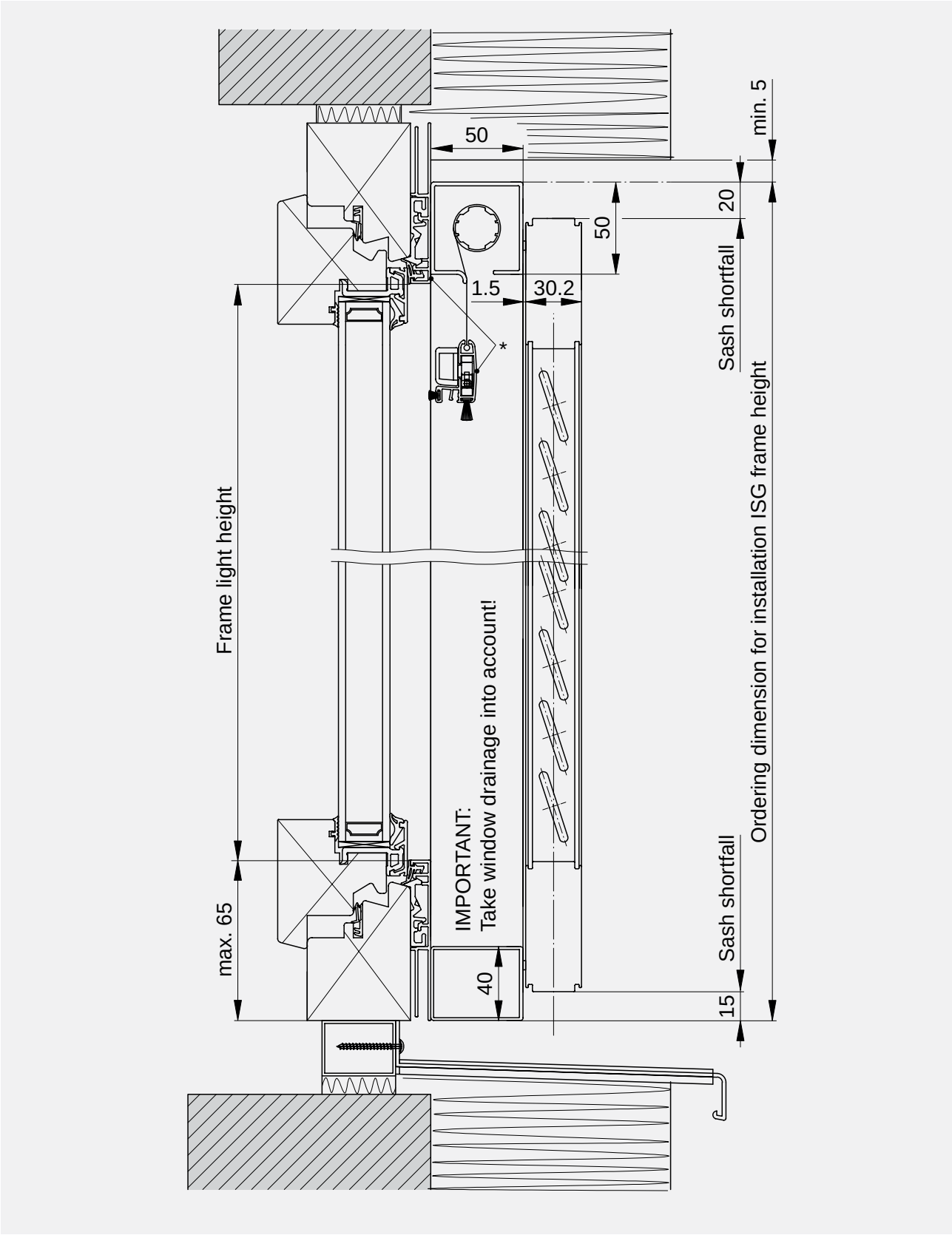

Horizontal section: Installation frame 40 x 50, with insect screen

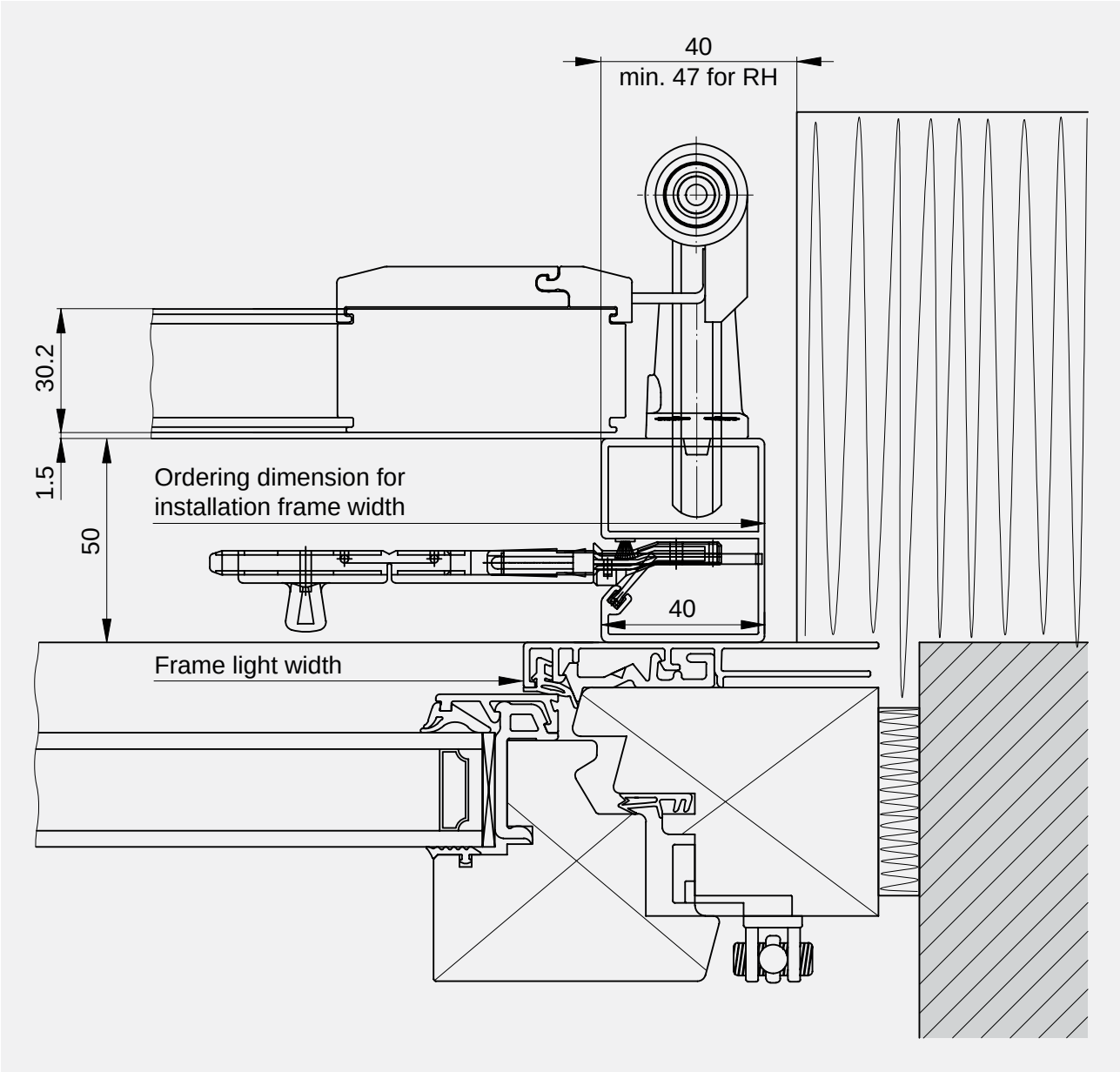

END STOP DIAGRAMS

Scheme 1

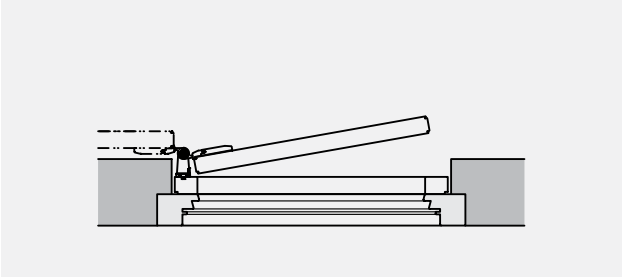

Scheme 1L

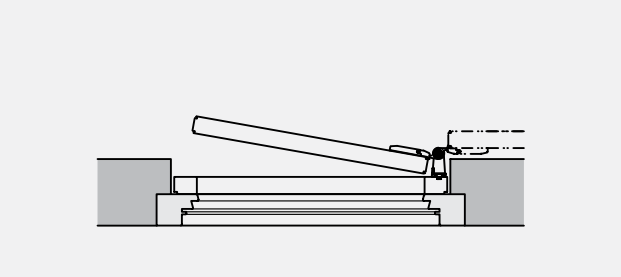

Scheme 1R

Scheme 2

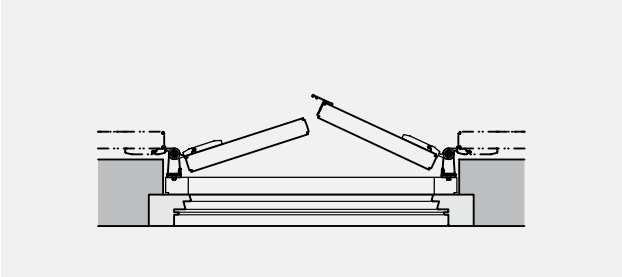

Scheme 2

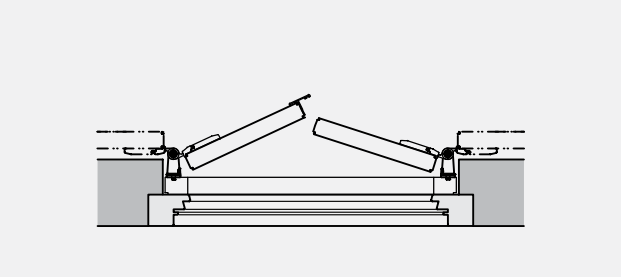

Scheme 2S

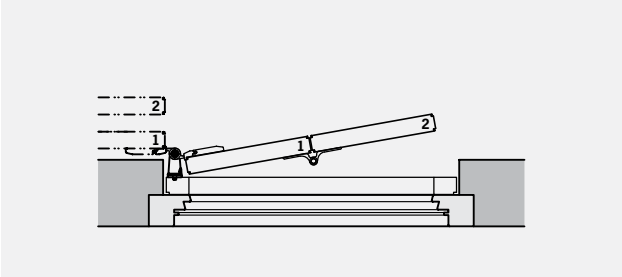

Scheme 2L

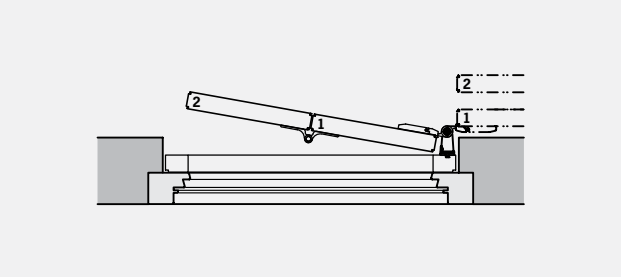

Scheme 2R

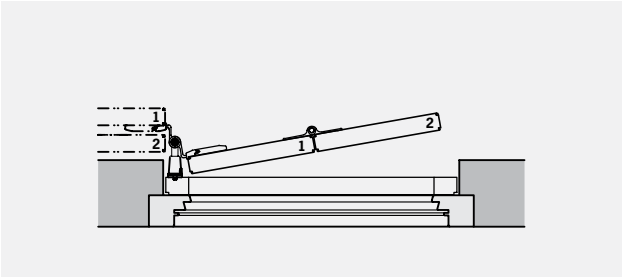

Scheme 2LA

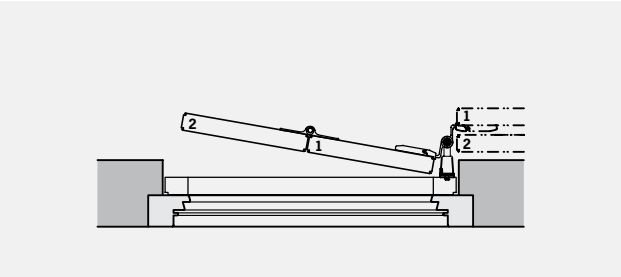

Scheme 2RA

Scheme 3

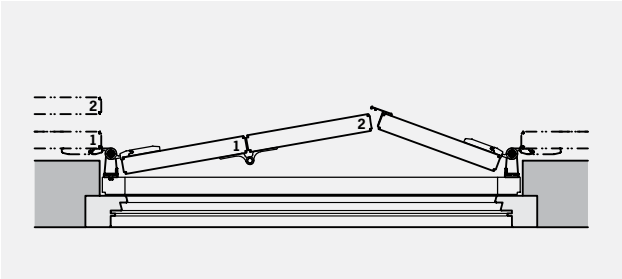

Scheme 3L

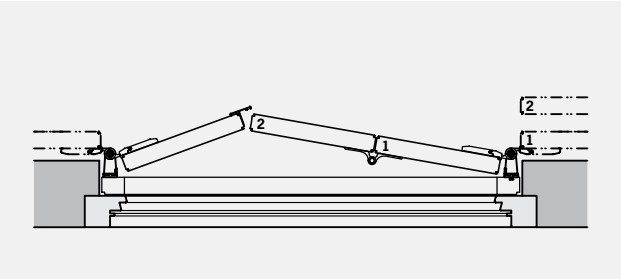

Scheme 3R

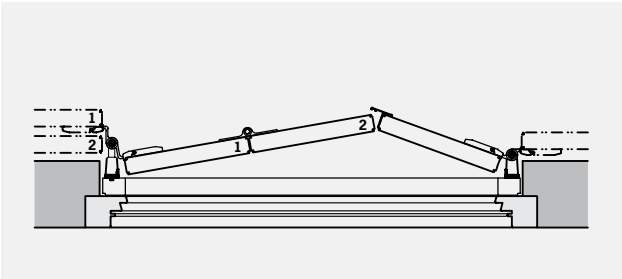

Scheme 3LA

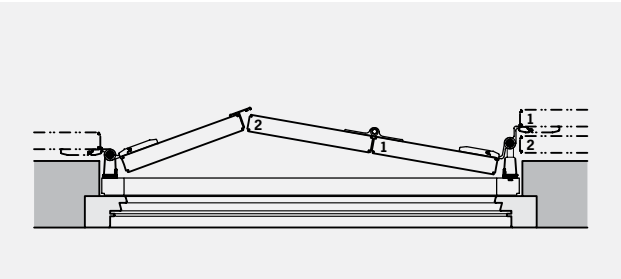

Scheme 3RA

Scheme 4

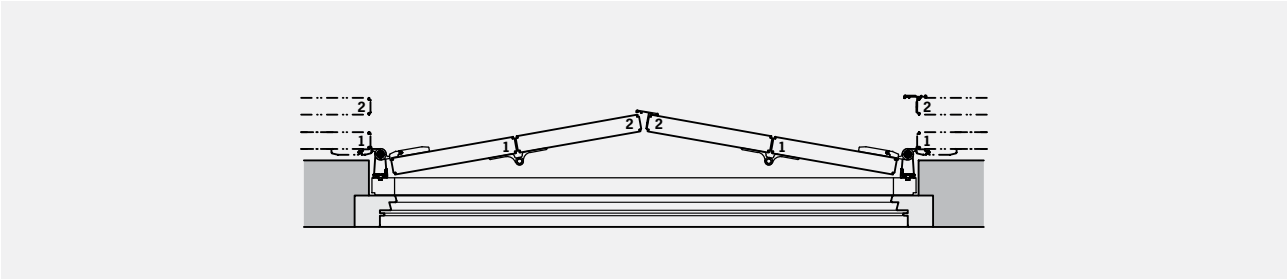

Scheme 4

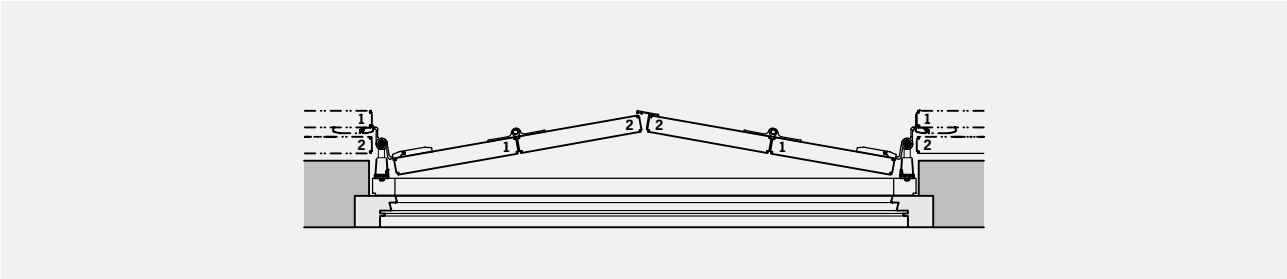

Scheme 4A

FRIEZE

Horizontal frieze

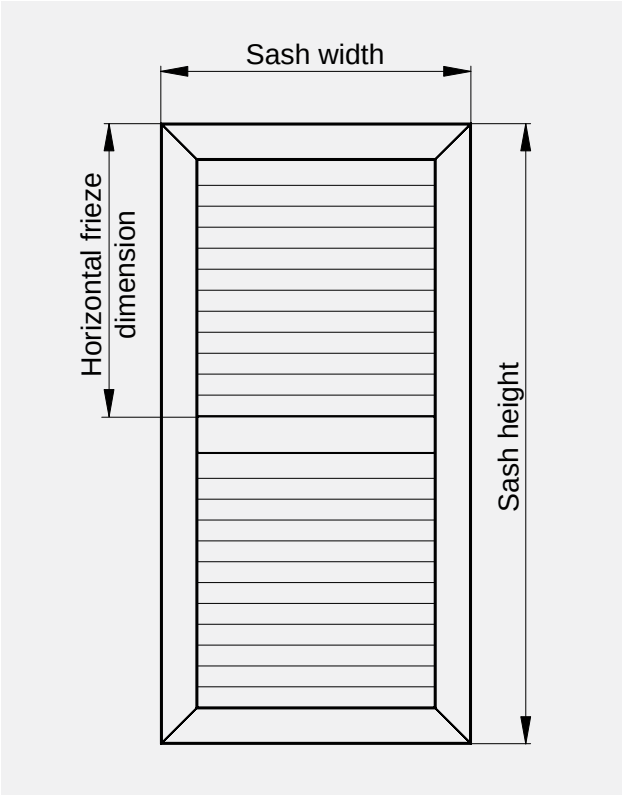

Min. horizontal frieze dimension
300

RETENTION ELEMENTS

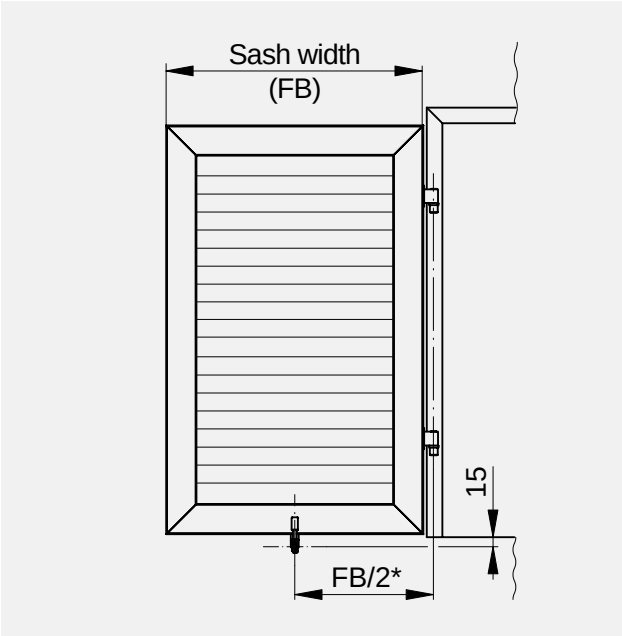

* min. 180

Shutter holder

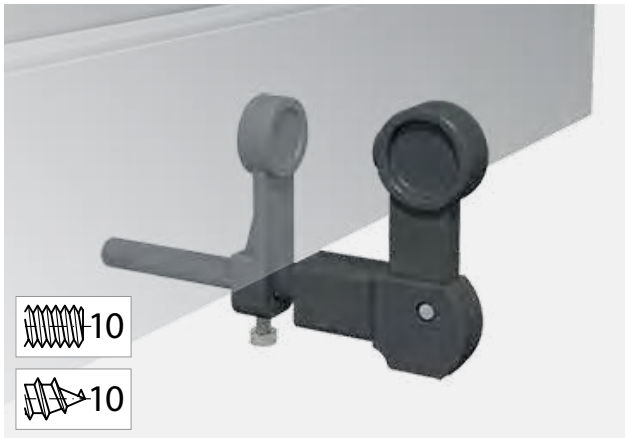

Lady's head

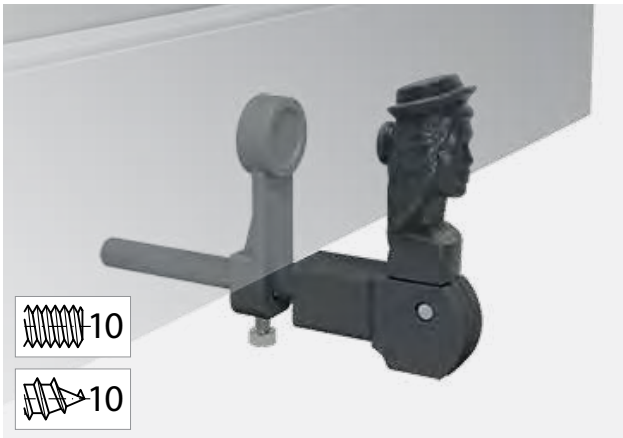

Shutter holder, automatic

Wing shutter with installation frame

Shutter latches

Door casement holder

Snap holder

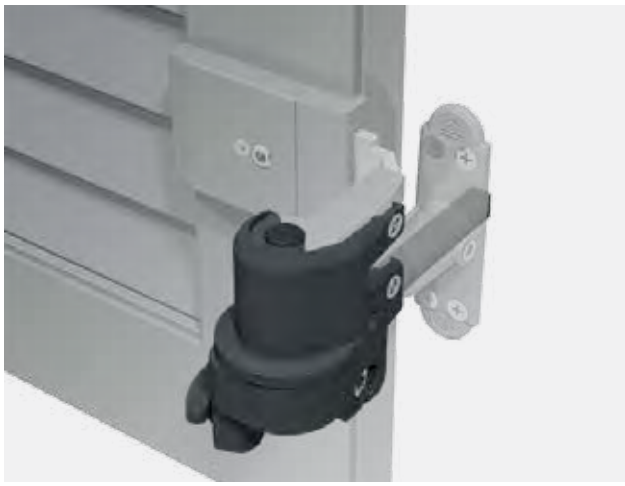

Restriction:
- max. 1.2 m^2
- max. 60 km/h

of limited usage!

Convenience casement holder

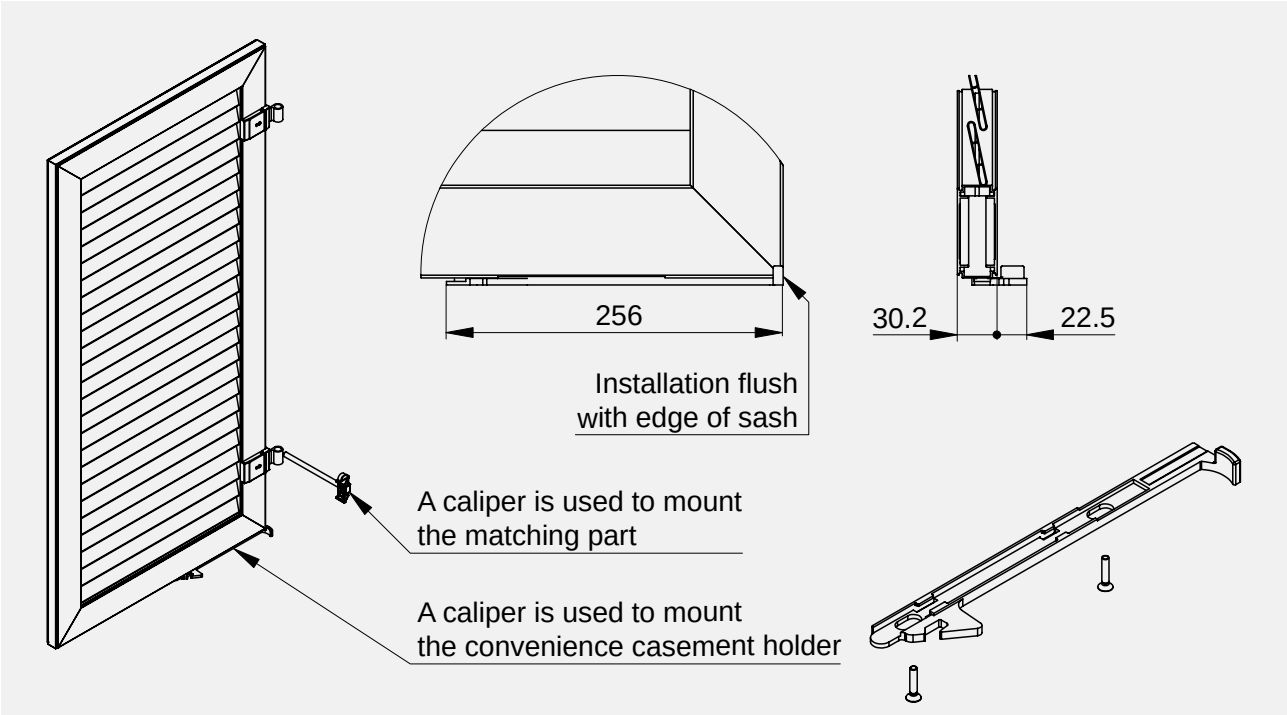

Type 1 | Standard window

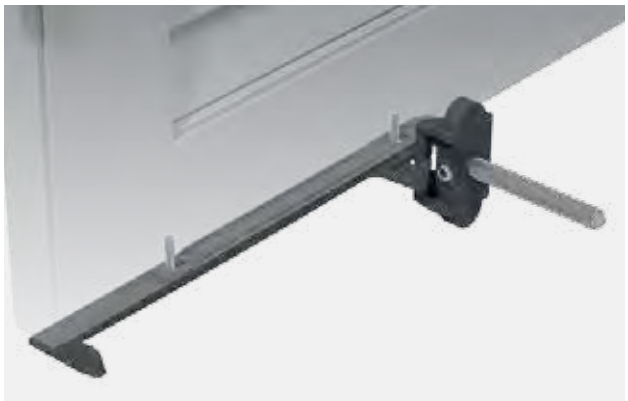

Type 2 | Option window

Type 3 | Standard door

LOCKERS

Rod lock 2F

Snap lock

Shutter middle lock

Wing shutter conventional

LIMIT DIMENSIONS SASH	60
MOUNTING SITUATIONS WALL	61
MOUNTING SITUATION SCREEN FRAME	63
SASH TYPES	64
SECTIONS/DETAILS: WALL MOUNTING	67
SECTIONS/DETAILS: SCREEN FRAME MOUNTING	69
END STOP DIAGRAMS	71
PISTON POSITIONS WITH JUSTIERFIX	73
FRIEZE	74
CLAMP	75
BANDS	76
RETENTION ELEMENTS	77
LOCKERS	79

LIMIT DIMENSIONS SASH

Version	Width min. (B)	Width max. (B)	Height min. (Al)	Height max. (Al)	Surface max. [m²]
1 sash	400	800	800	2500	2
2 sashs	800	1600			4
3 sashs	1200	2400			6
4 sashs	1600	3200			8

Definitions of dimensions 84

MOUNTING SITUATIONS WALL

Vertical section: Shutter rabbet

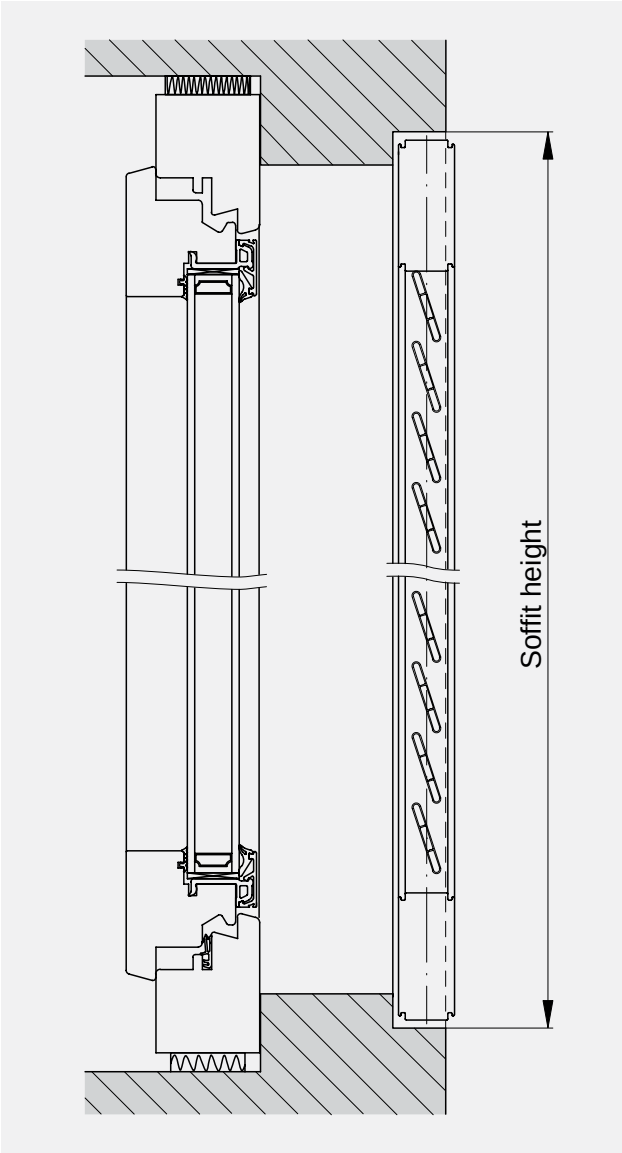

Vertical section: In the soffit

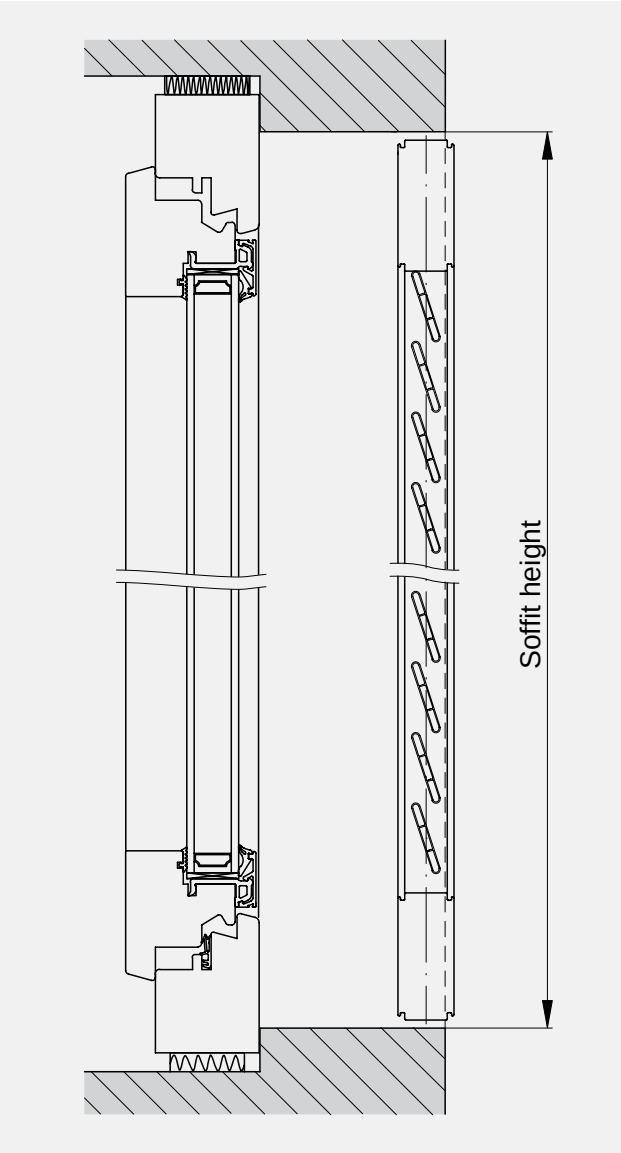

Horizontal section: Shutter rabbet

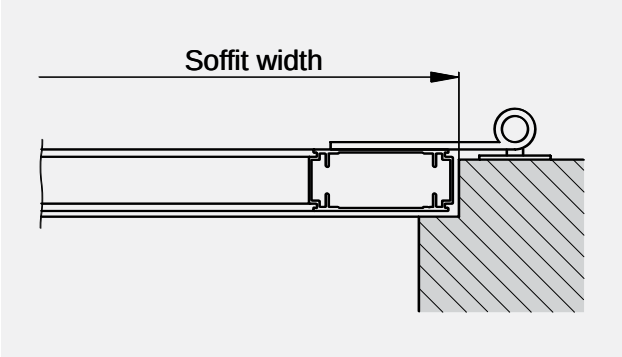

Horizontal section: In the soffit

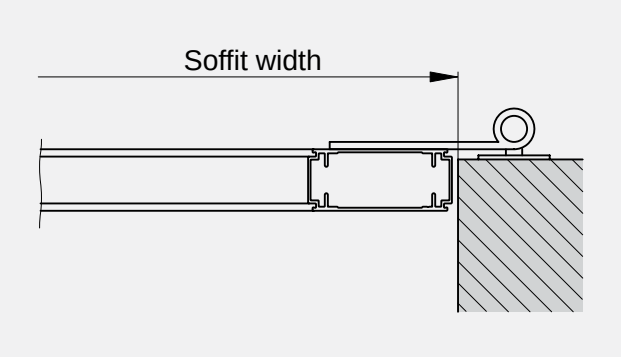

Vertical section: On the soffit

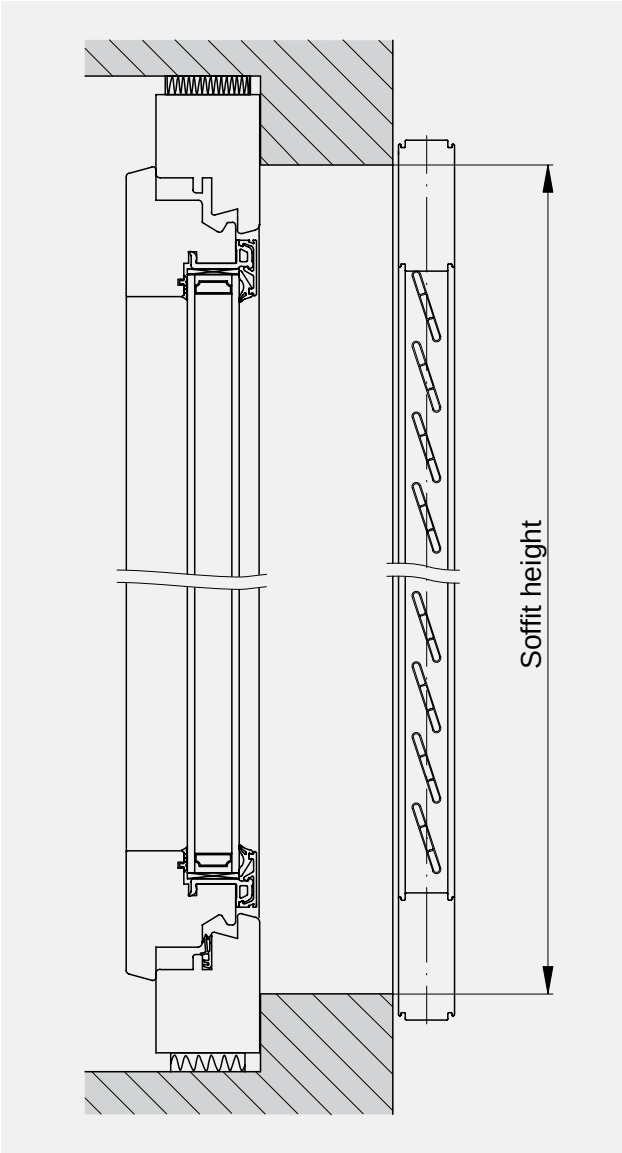

Horizontal section: On the soffit

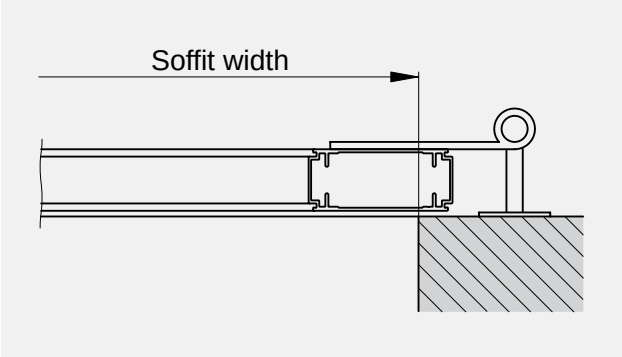

Sections / Details 67

MOUNTING SITUATION SCREEN FRAME

Vertical section

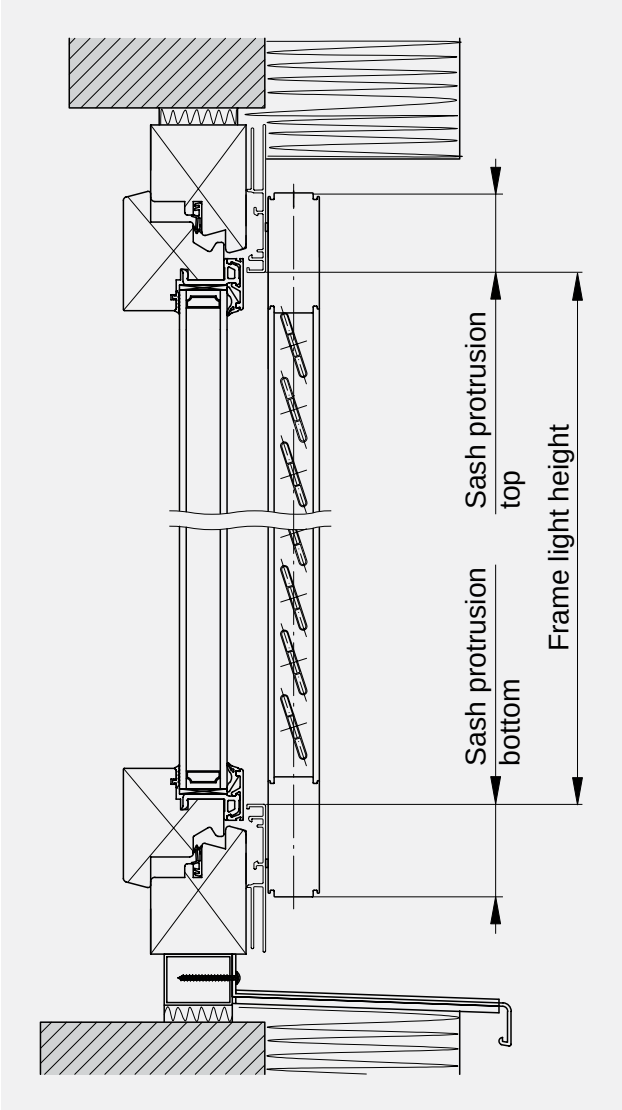

Horizontal section

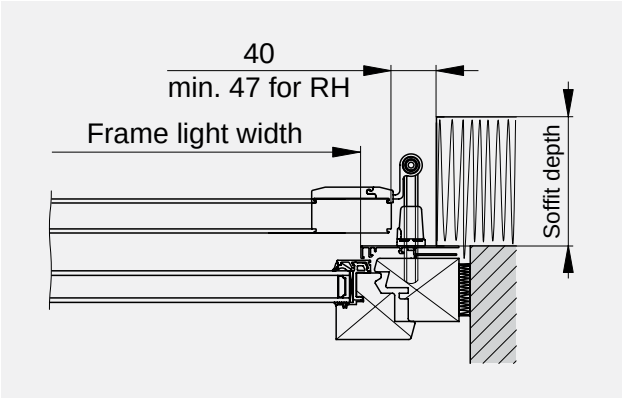

Sections / Details 69

SASH TYPES

Fixed slats

Model A

Model R

Model T

Model EZ

Movable slats

Model B

Model E

Fillings

Model C

Model CH

Model F

Model G ISO

SECTIONS / DETAILS: WALL MOUNTING

Horizontal section: Shutter rabbet

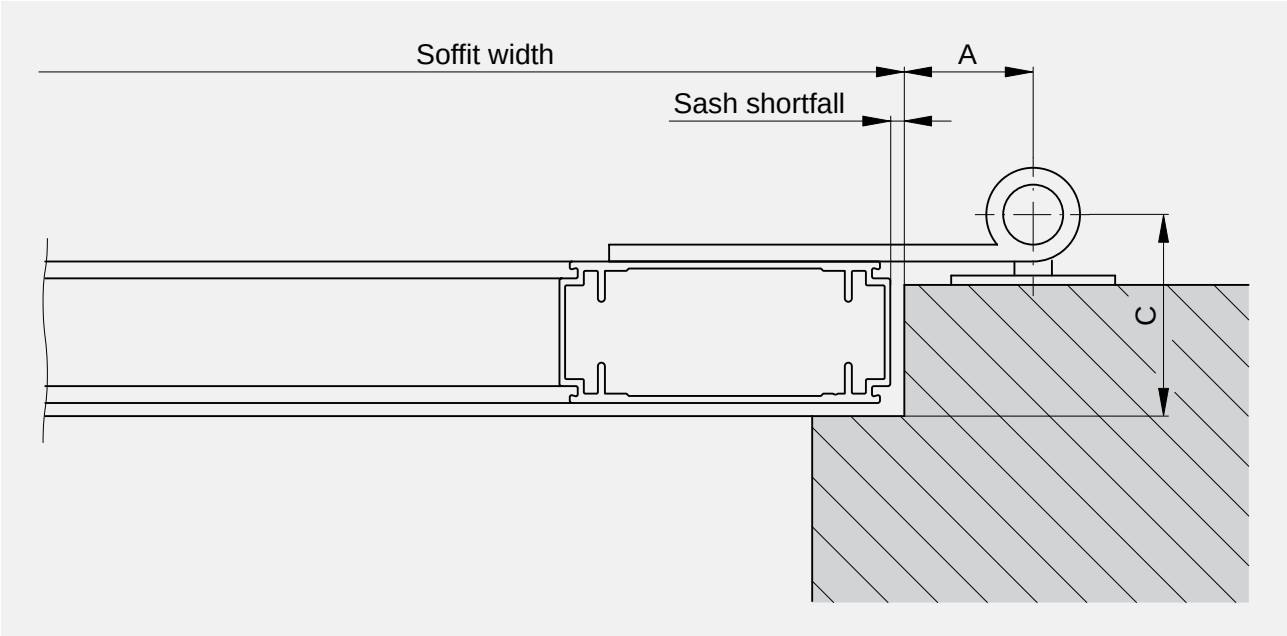

A	C
15–65	33–49

Horizontal section: In the soffit

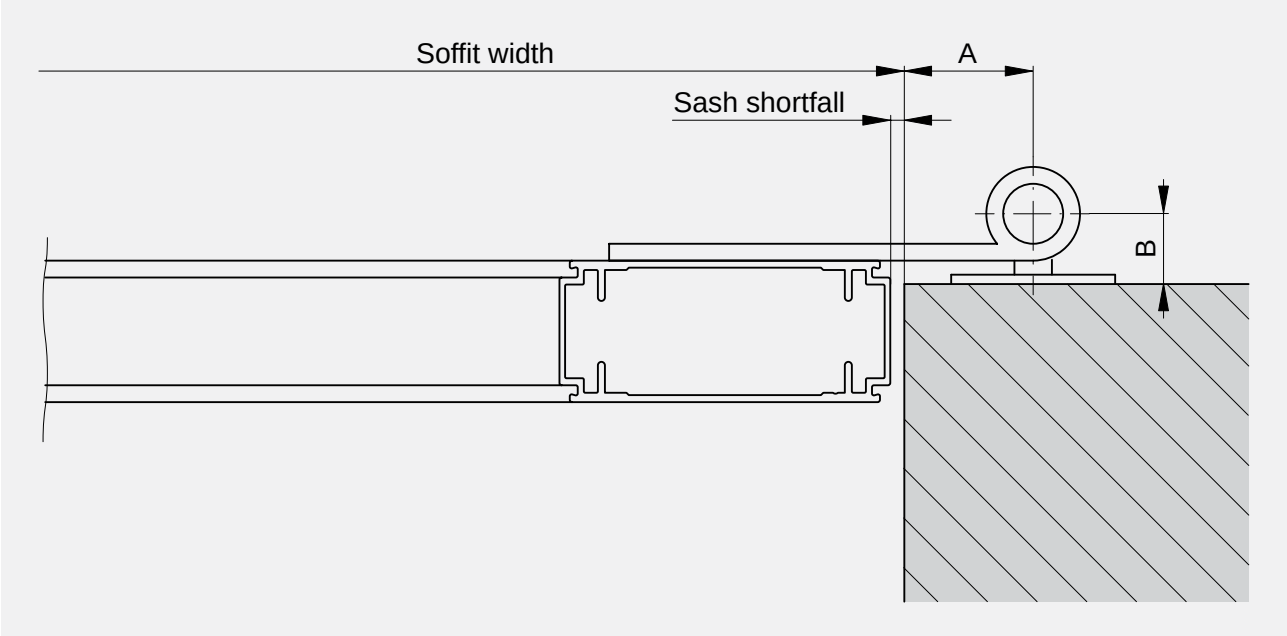

A	B
15–65	13–60

Horizontal section: On the soffit

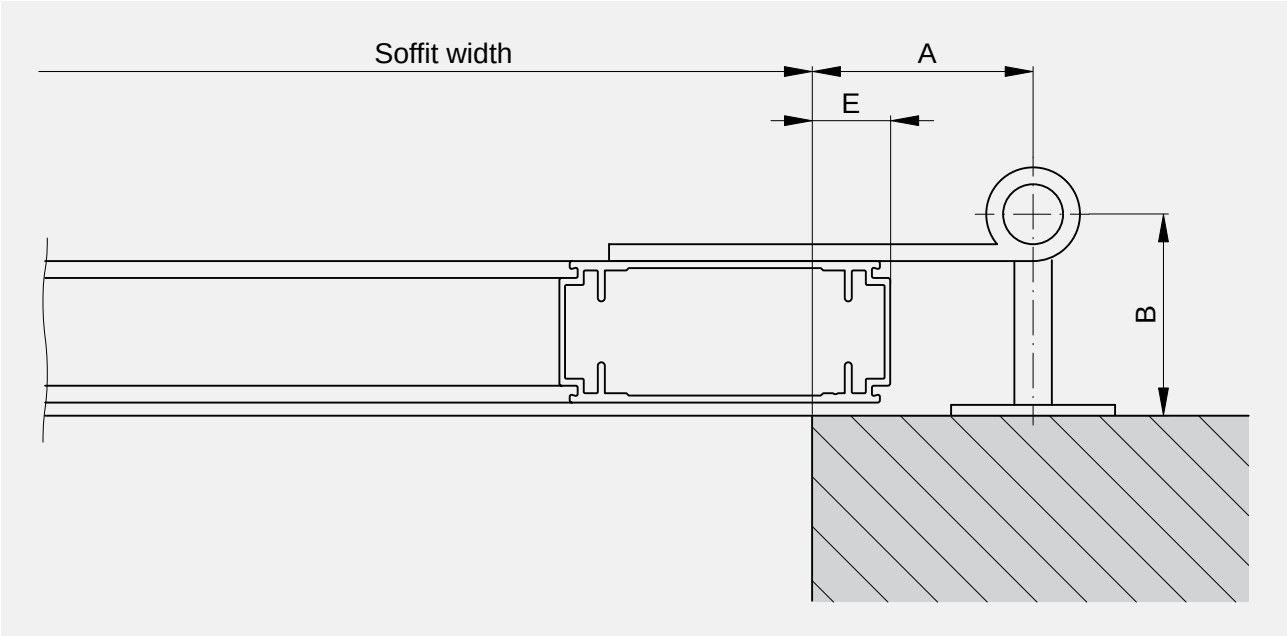

A	B	E*
15–65	38–65	5–30

* Dimension E depends on dimension A

SECTIONS / DETAILS: SCREEN FRAME MOUNTING

Vertical section

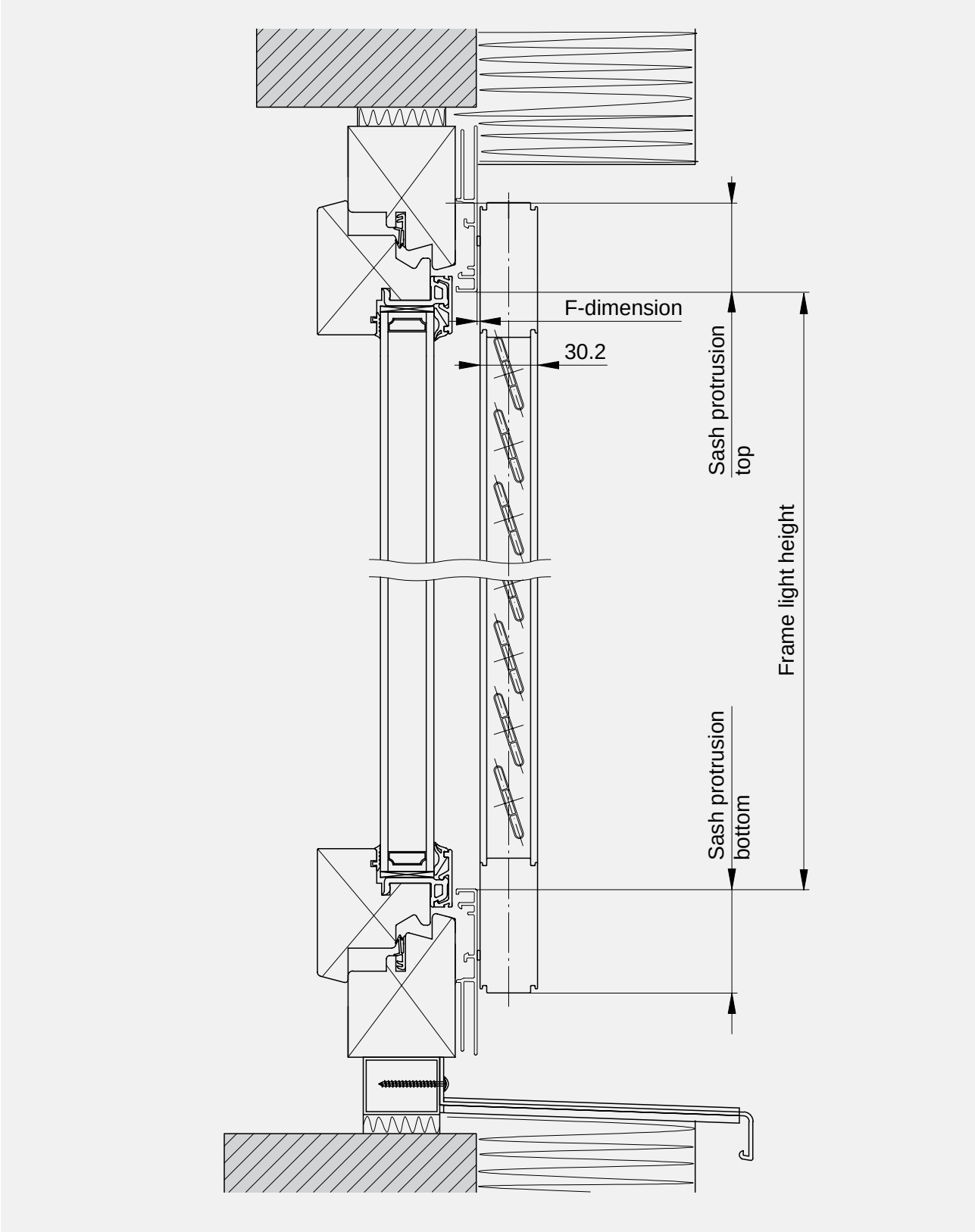

F

Standard: 1.5

Horizontal section

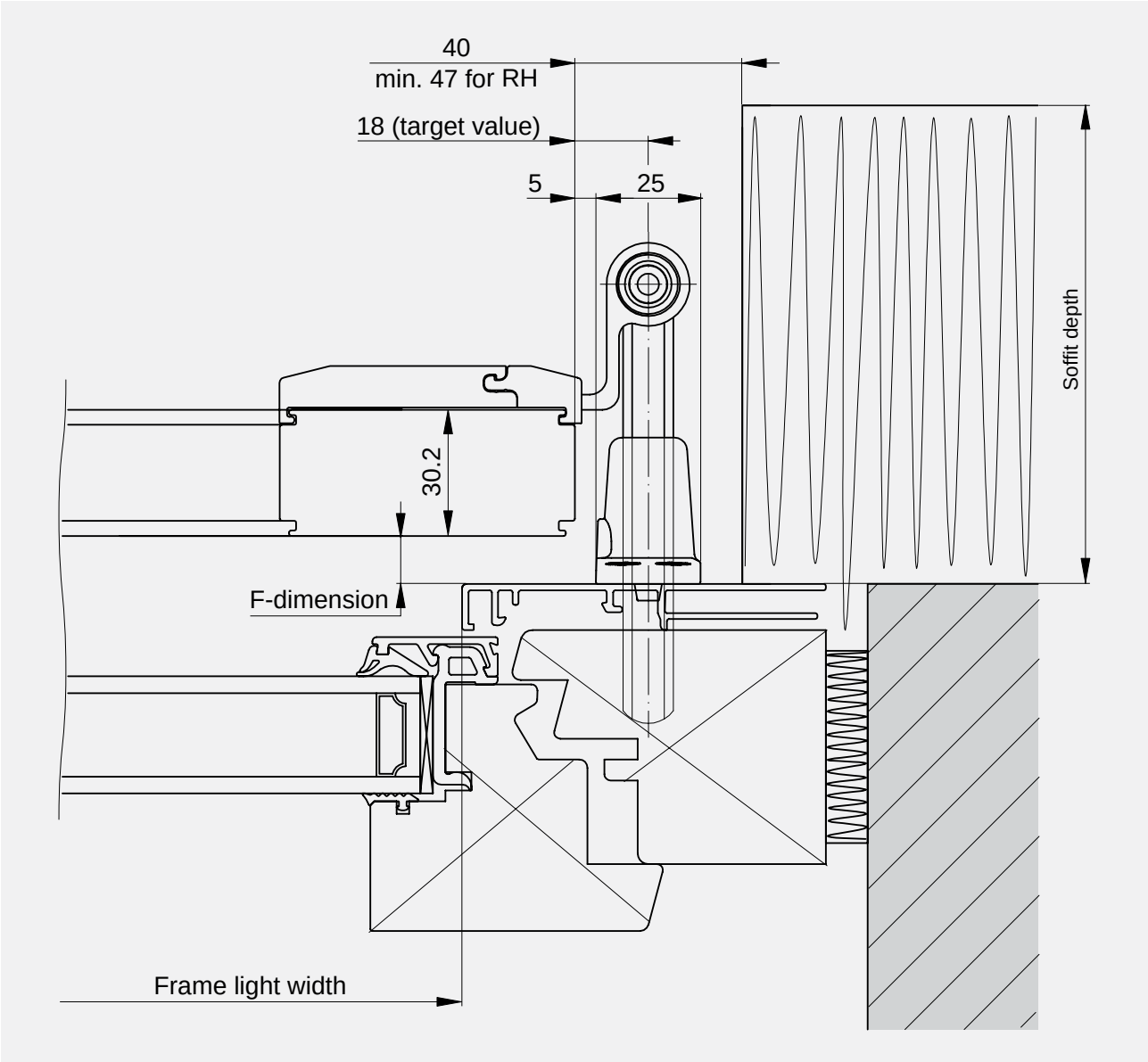

F
Standard: 1.5

END STOP DIAGRAMS

Scheme 1

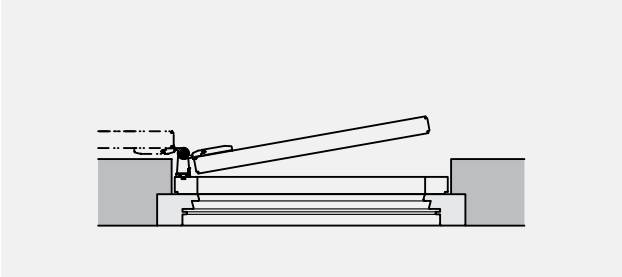

Scheme 1L

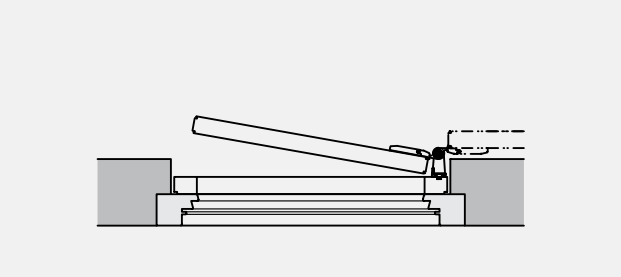

Scheme 1R

Scheme 2

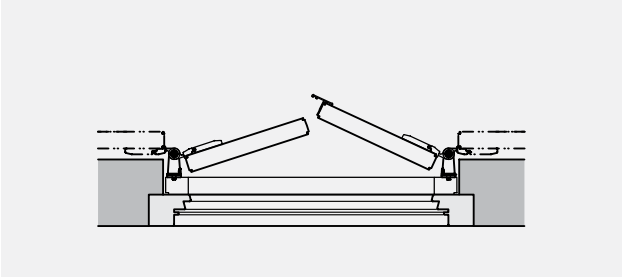

Scheme 2

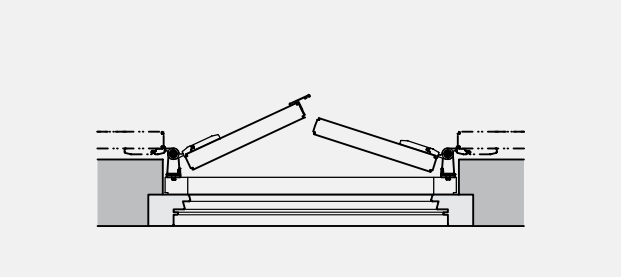

Scheme 2S

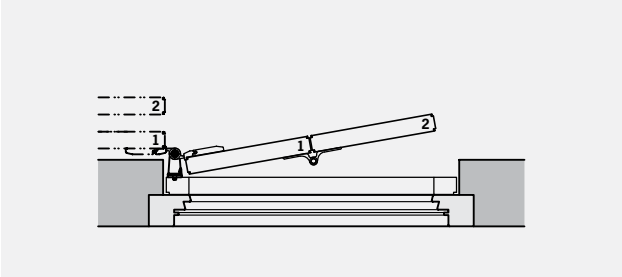

Scheme 2L

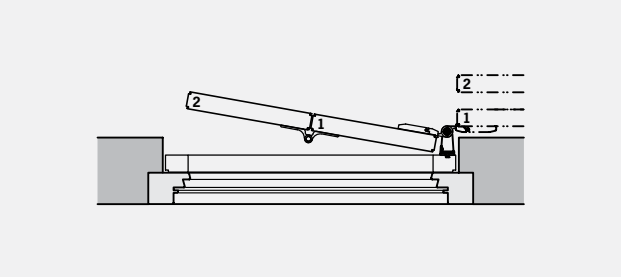

Scheme 2R

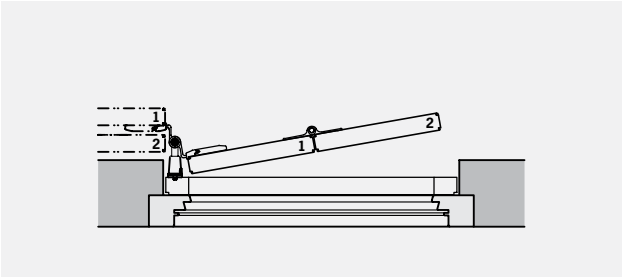

Scheme 2LA

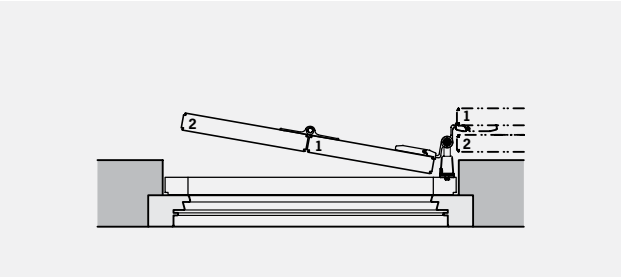

Scheme 2RA

Scheme 3

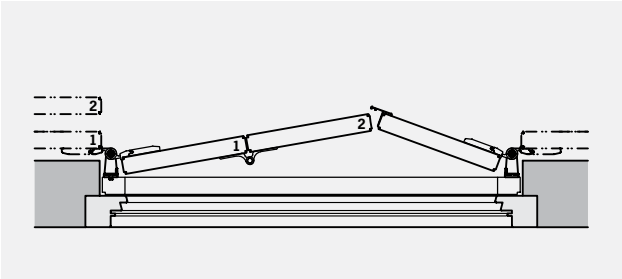

Scheme 3L

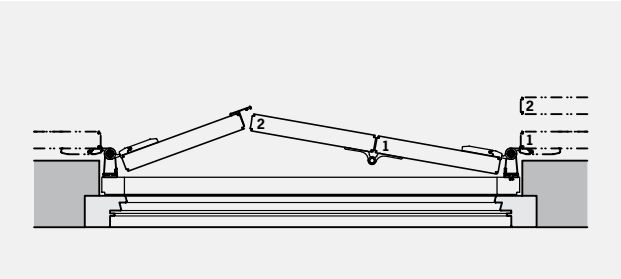

Scheme 3R

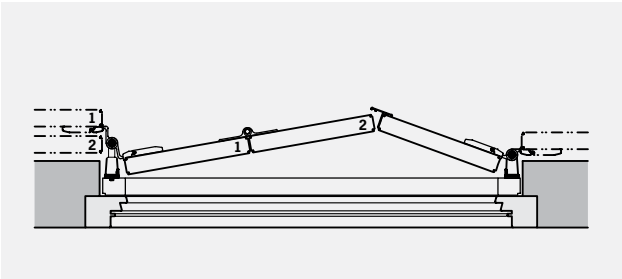

Scheme 3LA

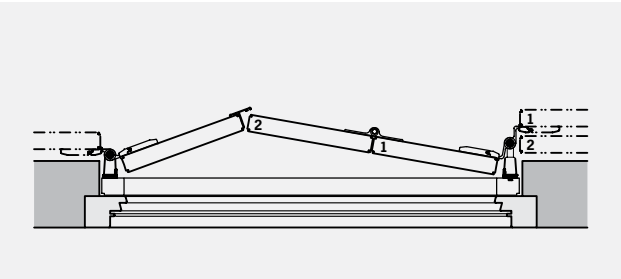

Scheme 3RA

Scheme 4

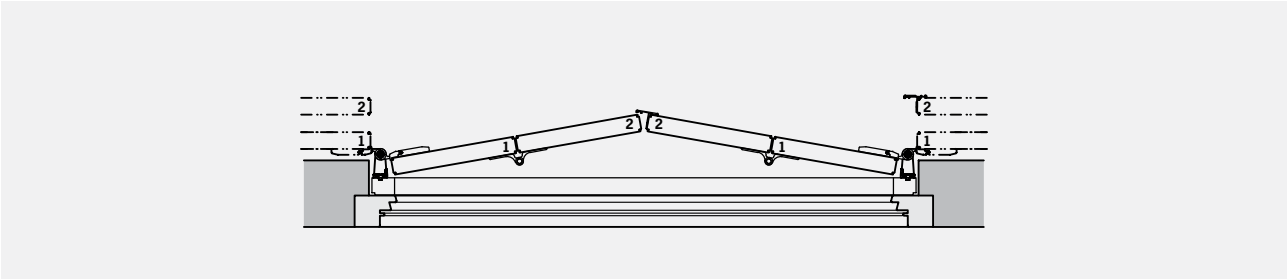

Scheme 4

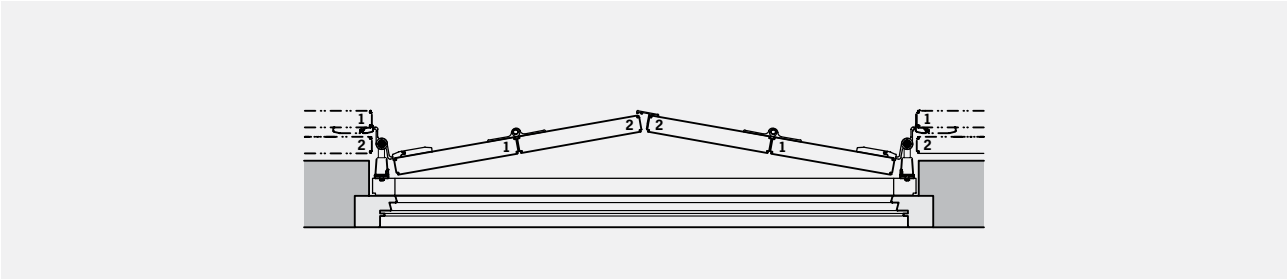

Scheme 4A

PISTON POSITIONS WITH JUSTIERFIX

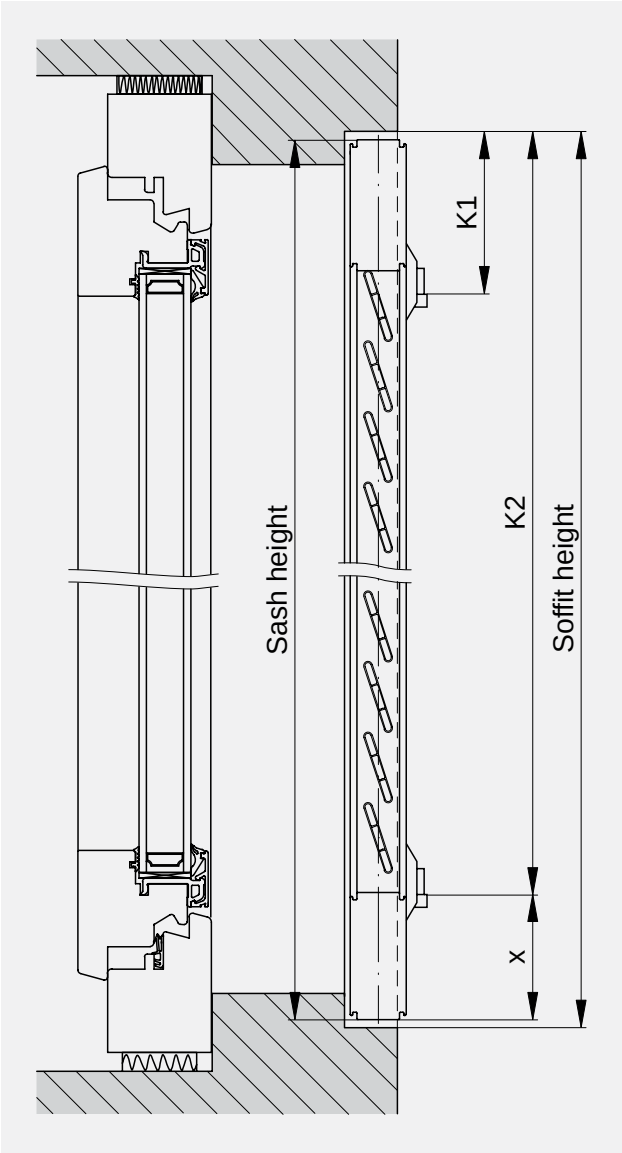

K1	K2	x
115 … 400[1]	Sash height – x	90 … 355[2]

Standard:

[1] 180

[2] 150

FRIEZE

Horizontal frieze

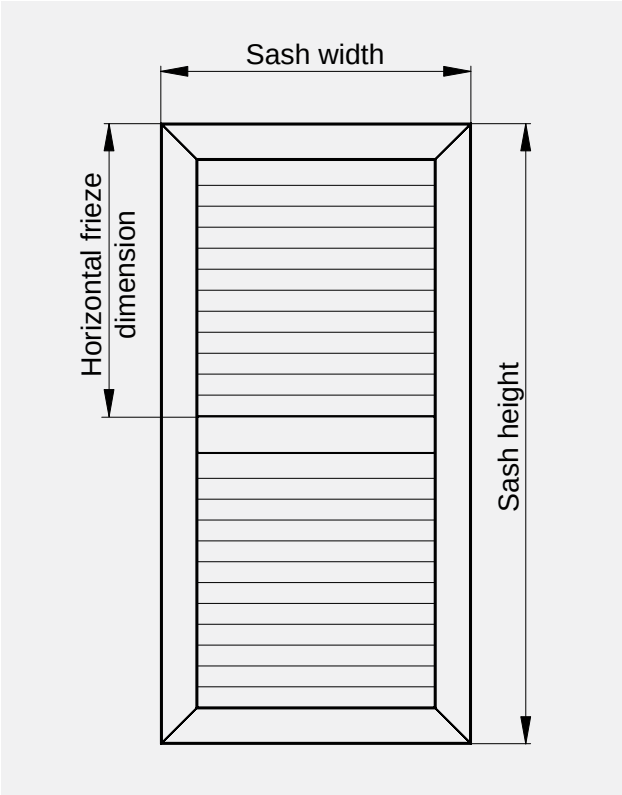

Min. horizontal frieze dimension
300

CLAMP

Screw clamp

Plate piston

Universal clamp

Screen frame piston

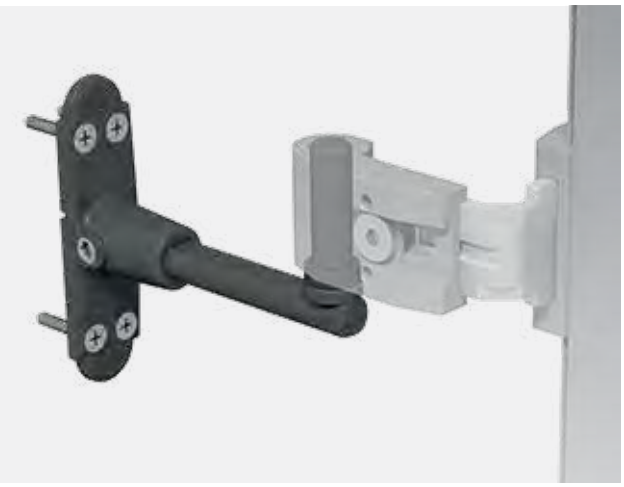

Polygond

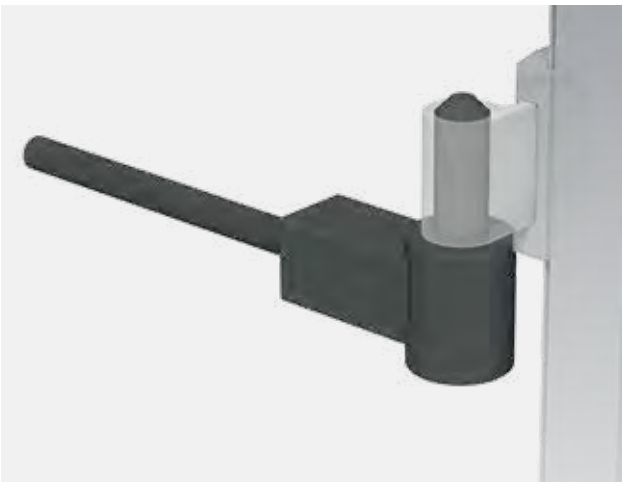

BANDS

Systemfix external wall installation

Systemfix screen frame installation

Justierfix

Long band

RETENTION ELEMENTS

Shutter holder

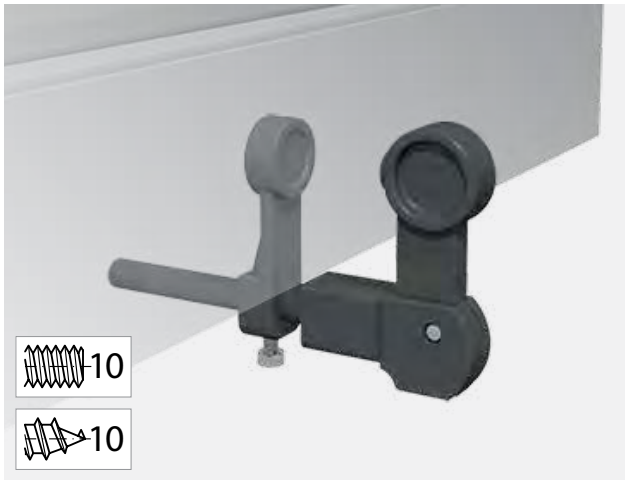

Lady's head

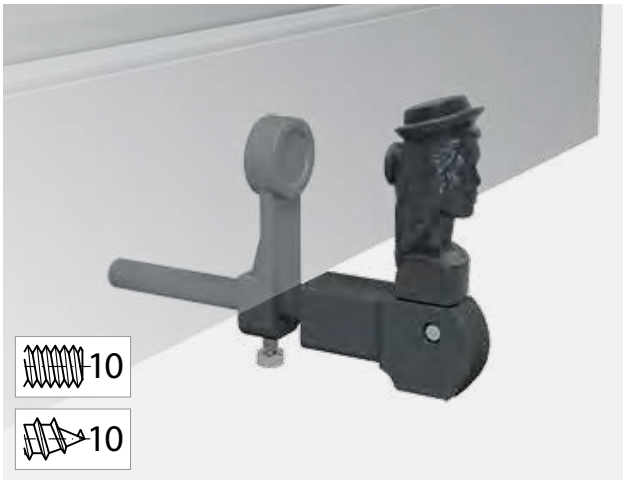

Shutter latches

Shutter latches Marseille

Shutter holder, automatic

Door casement holder

Convenience casement holder

Type 1 | Standard window

Type 2 | Option window

Type 3 | Standard door

Snap holder

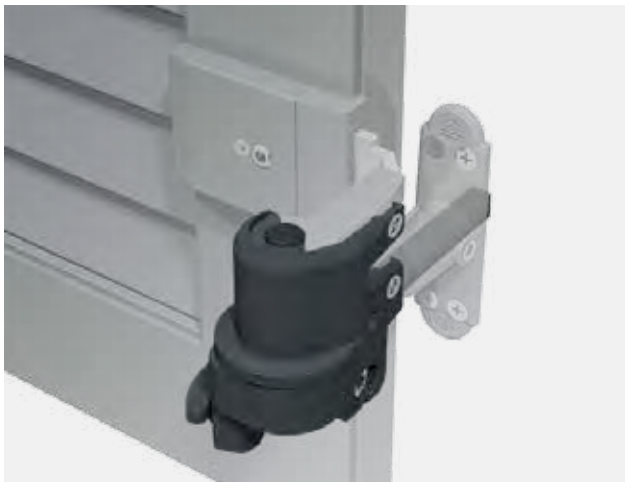

Restriction:
- max. 1.2 m^2
- max. 60 km/h

of limited usage!

LOCKERS

Espagnolette round

Rod lock 2 sashs

Snap lock

Shutter middle lock

Pull stays

Shutter rake and venetian blind rod

Planning

DEFINITIONS OF DIMENSIONS 84

DEFINITIONS OF DIMENSIONS

– Dimensions should always be viewed from **inside out**.